Parts

LineLazer™ V 200HS / 200DC Airless Line Stripers

Standard Series and High Production (HP) Series

3A3390E

EN

For the application of line striping materials.
For professional use only.
For outdoor use only.
Not for use in explosive atmospheres or hazardous locations.

Maximum Operating Pressure: 3300 psi (22.8 MPa, 228 bar)

Important Safety Instructions

Read all warnings and instructions in this manual and in related manuals.
Be familiar with the controls and the proper usage of the equipment.
Save these instructions.

Related Manuals:			
3A3426	Operation	309277	Pump
311254	Gun	3A3428	Auto-Layout Applications Methods

LineLazer V 200HS Standard Series

LineLazer V 200DC

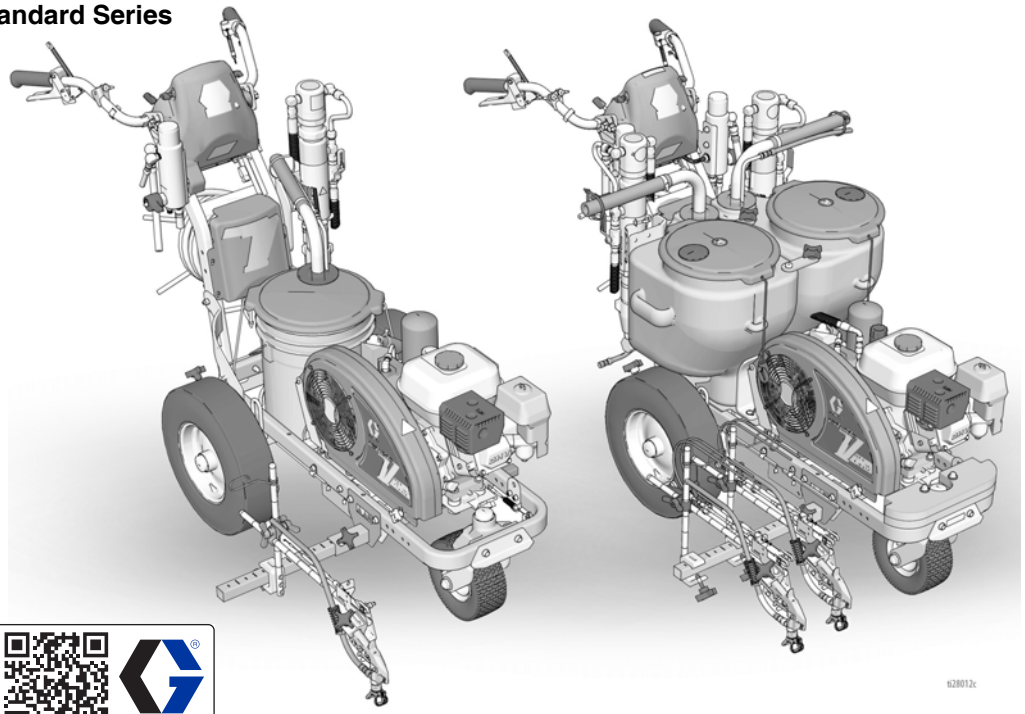

SERVICE to every customer, every time
www.graco.com/techsupport
GRACO

Use only genuine Graco replacement parts.
The use of non-Graco replacement parts may void warranty.

Contents

Tip Selection 4
LineLazer V 200HS Parts (Standard & HP Series) 5
LineLazer V 200DC Parts (Standard & HP Series) 6
Notes 7
Parts Drawing - LineLazer V 200HS 8
Parts List - LineLazer V 200HS 9
Parts Drawing - LineLazer V 200DC 10
Parts List - LineLazer V 200DC 11
Parts Drawing - LineLazer V 200HS / 200DC 12
Parts List - LineLazer V 200HS / 200DC 13
Gun Holder and Arm 13
Gun Trigger 13
Parts Drawing - LineLazer V 200HS / 200DC 14
Parts List - LineLazer V 200HS / 200DC 15
Handle/Controls 15
Filter - 200HS 15
Parts Drawing - LineLazer V 200DC 16
Parts List - LineLazer V 200DC 17
Filters A & B 17
Parts Drawing - LineLazer V 200HS 18
Parts List - LineLazer V 200HS 19
Parts Drawing - LineLazer V 200DC 20
Parts List - LineLazer V 200DC 21
Parts Drawing - LineLazer V 200HS / 200DC 22
Parts List - LineLazer V 200HS / 200DC 23
Parts Drawing - LineLazer V 200HS / 200DC 24
Parts List - LineLazer V 200HS / 200DC 25
Wiring Diagram 200HS (Standard Series) 26
Wiring Diagram 200DC (Standard Series) 27
Wiring Diagram 200HS (HP Auto Series/HP Reflective Series) 28
Wiring Diagram 200DC (HP Auto Series/HP Reflective Series) 29
Technical Specifications 30
Graco Standard Warranty 36
Graco Information 36

Manual	Language
3A3390	English
3A3813	French
3A3814	Spanish
3A3821	Dutch
3A3824	German
3A3827	Italian
3A3705	Russian
3A3831	Polish
3A3815	Chinese
3A3816	Korean
3A3817	Japanese

Models

LineLazer V 200HS & 200DC										
	Model:	Standard 1 Manual Gun	Standard 2 Manual Guns	HP Auto 1 Auto Gun	HP Auto 1 Manual Gun 1 Auto Gun	HP Auto 2 Auto Guns	HP Reflective 1 Manual Gun 1 PBS Tank	HP Reflective 1 Auto Gun 1 PBS Tank	HP Reflective 2 Auto Guns 1 PBS Tank	HP Reflective 2 Manual Guns 1 PBS Tank
200HS	17H459	✔								
	25P342	✔								
	17H461		✔							
	25P343		✔							
	17K582			✔						
	17H462			✔ with laser						
	17K637				✔					
	17H463				✔ with laser					
	17K583					✔				
	25P344					✔				
	17H464					✔ with laser				
	25P345					✔ with laser				
	17H460						✔			
	17J964							✔		
	17K585								✔	
	17H465								✔ with laser	
200DC	17Y269					✔ with laser				
	25P350					✔ with laser				
	17Y270								✔ with laser	
	25P348								✔ with laser	
	17Y231		✔							
	25P346		✔							
	17Y232					✔				
	25P349					✔				
	17Y233								✔	
	25P347								✔	
	17Y648									✔

*** All auto guns can be actuated manually.**

Tip Selection

	in. (cm)	in. (cm)	in. (cm)	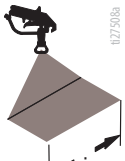 in. (cm)	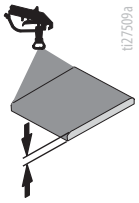	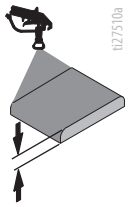	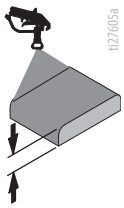
LL5213*	2 (5)				✔		
LL5215*	2 (5)					✔	
LL5217		4 (10)				✔	
LL5219		4 (10)					✔
LL5315*		4 (10)			✔		
LL5317		4 (10)			✔		
LL5319		4 (10)				✔	
LL5321		4 (10)				✔	
LL5323		4 (10)				✔	
LL5325		4 (10)					✔
LL5327		4 (10)					✔
LL5329		4 (10)					✔
LL5331		4 (10)					✔
LL5333		4 (10)					✔
LL5335		4 (10)					✔
LL5355		4 (10)					✔
LL5417			6 (15)		✔		
LL5419			6 (15)		✔		
LL5421			6 (15)		✔		
LL5423			6 (15)			✔	
LL5425			6 (15)			✔	
LL5427			6 (15)			✔	
LL5429			6 (15)			✔	
LL5431			6 (15)				✔
LL5435			6 (15)				✔
LL5621				12 (30)	✔		
LL5623				12 (30)	✔		
LL5625				12 (30)	✔		
LL5627				12 (30)	✔		
LL5629				12 (30)	✔		
LL5631				12 (30)		✔	
LL5635				12 (30)		✔	
LL5639				12 (30)			✔

* Use 100 mesh filter to reduce tip clogs.

LineLazer V 200HS Parts (Standard & HP Series)

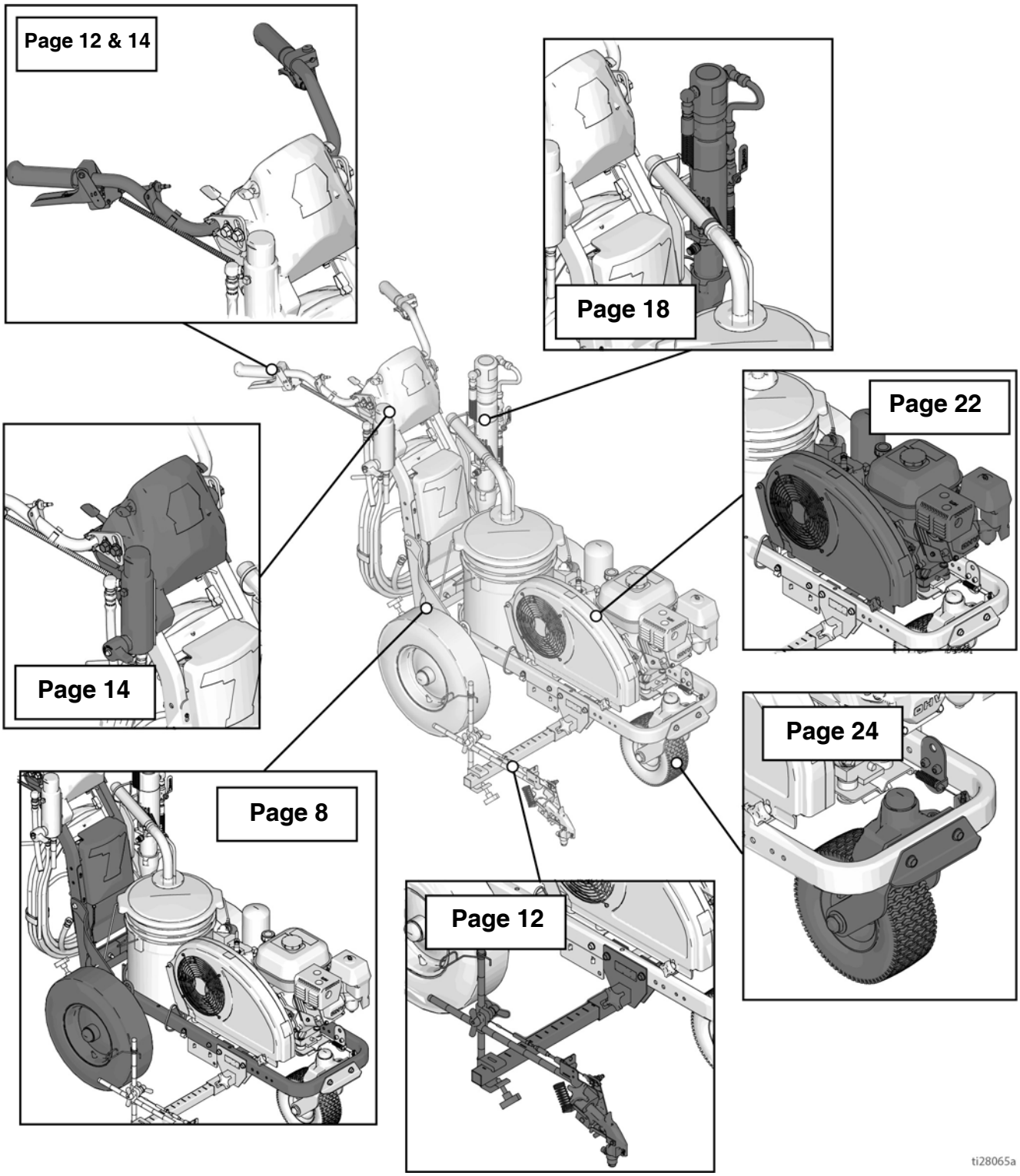

LineLazer V 200DC Parts (Standard & HP Series)

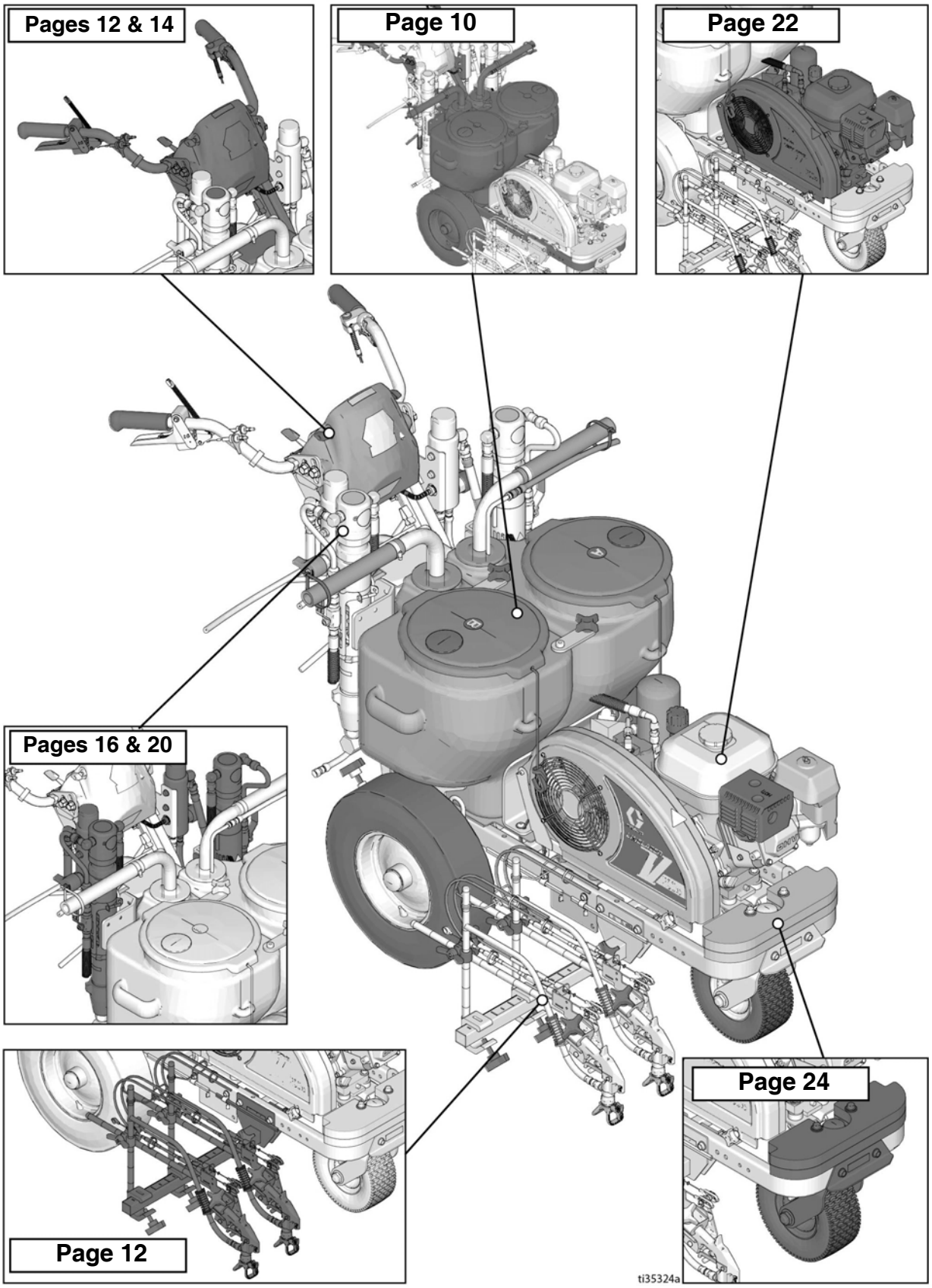

Notes

Parts Drawing - LineLazer V 200HS

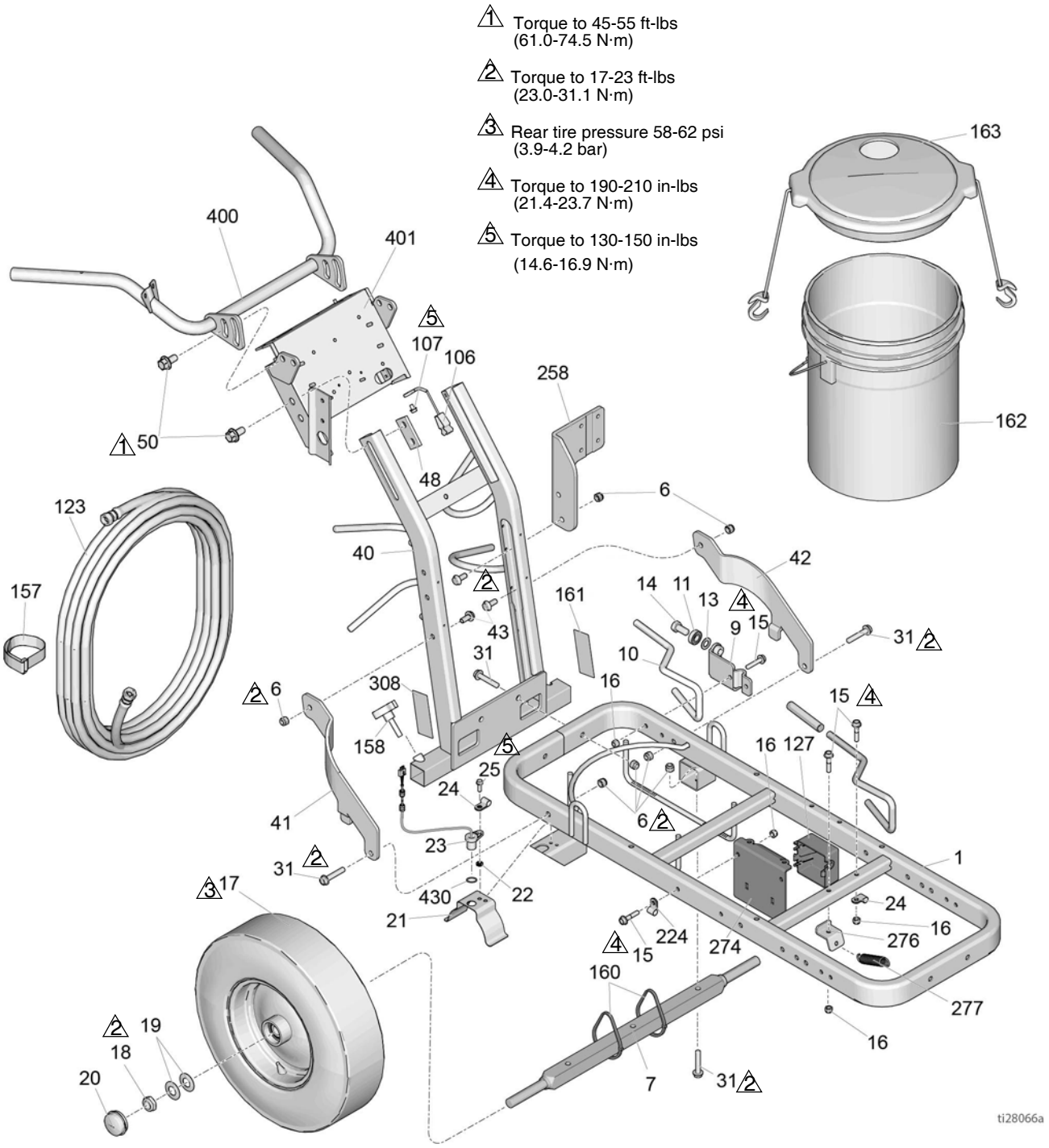

Parts List - LineLazer V 200HS

Ref	Part	Description	Qty
1	287623	FRAME, linestriper, painted	1
6	101566	NUT, lock	12
7	193405	AXLE	1
9	198891	BRACKET	1
10	198930	ROD, brake	1
11	198931	BEARING	1
13	195134	SPACER	1
14	113961	SCREW, cap, hex hd	1
15	112960	SCREW, flange, hex	5
16	111040	NUT, lock, insert, nylock, 5/16	5
17	111020	WHEEL, pneumatic w/o sensor ring	1
	255162	WHEEL, pneumatic w/ sensor ring	1
18	112405	NUT, lock	2
19	112825	WASHER	4
20	114648	CAP, dust	2
21	15J088	SHIELD, distance sensor	1
22	15K452	SPACER, round	1
23	15K357	SENSOR, distance	1
24	108868	CLAMP, wire	2
25	260212	SCREW, hex washer hd, thd form	2
31	114982	SCREW, cap, flange hd	6
40	24Y665	FRAME, handle upright, painted	1
41	15F576	BRACE, right, painted	1
42	15F577	BRACE, left, painted	1
43	128977	SCREW, cap button hd	4
48	17J125	BRACKET, slide	2
50	17J136	SCREW, hex, flange head	8
106	237686	WIRE, ground	1
107	107257	SCREW, thread forming, hex hd	1
123	124884	HOSE, coupled, 3/8”x22’	1
127	15F369	BOX	1
157	114271	STRAP, retaining	1
158	108471	KNOB, pronged	1
160	404989	STRAP, tie	5
161▲	17K394	LABEL, warning fire & skin	1
162	115077	PAIL, plastic	1
163	24U241	KIT, pail, cover	1
224	17H721	CLAMP, wire	1
258	17H681	BRACKET, mount, pump, hydraulic	1
274	17J549	BRACKET, reservoir	1
276	15F441	BRACKET, frame	1
277	119696	SPRING, extension	1
308▲	17K392	LABEL, safety, warning	1
400	24Y641	BAR, handle	1
401	24Y642	PLATE, control	1
430	155500	PACKING, o-ring	1

▲ *Replacement safety labels, tags, and cards are available at no cost.*

Parts Drawing - LineLazer V 200DC

1 Torque to 45-55 ft-lbs (61.0-74.5 N·m)

2 Torque to 17-23 ft-lbs (23.0-31.1 N·m)

3 Rear tire pressure 58-62 psi (3.9-4.2 bar)

4 Torque to 190-210 in-lbs (21.4-23.7 N·m)

5 Torque to 130-150 in-lbs (14.6-16.9 N·m)

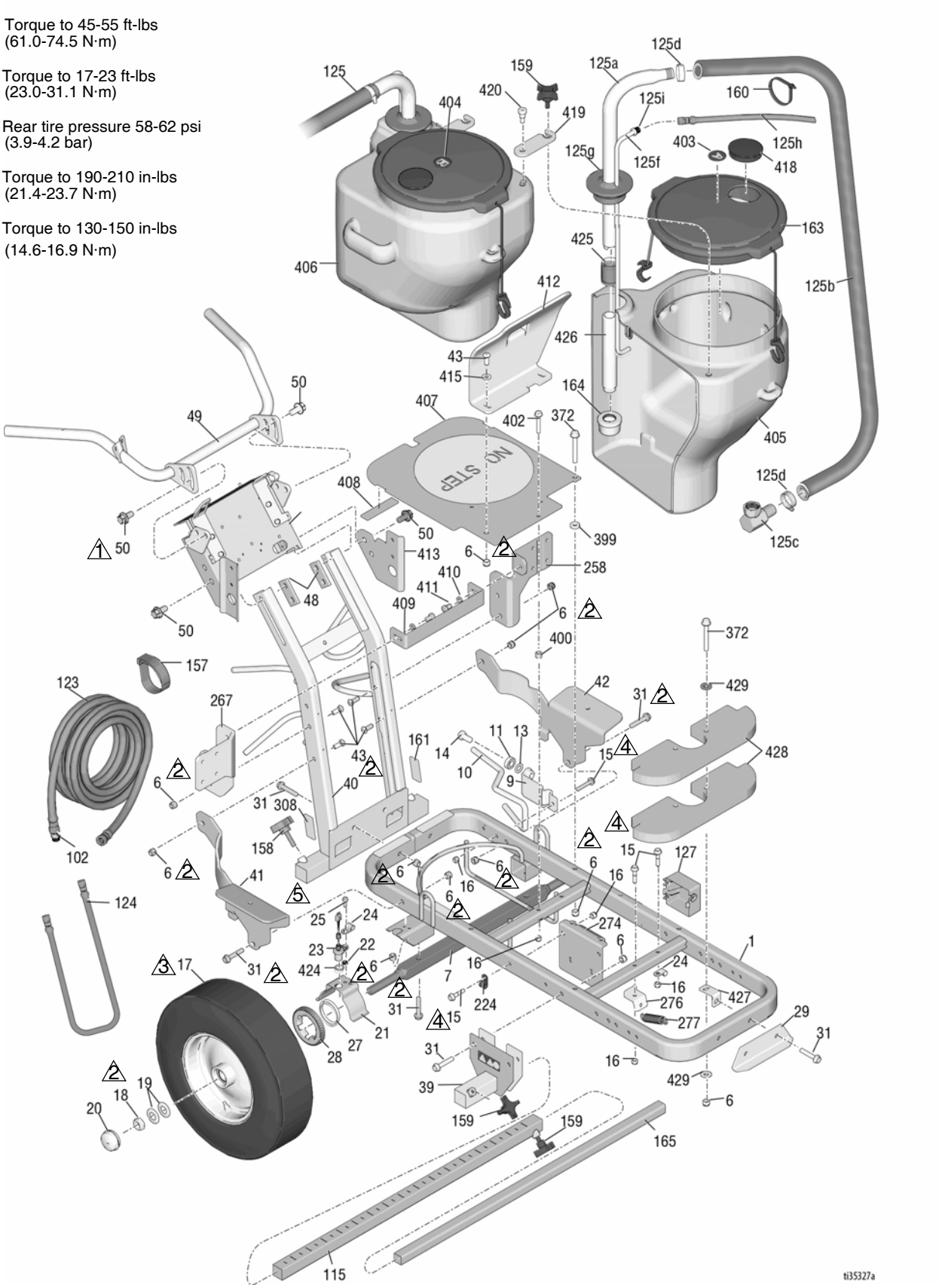

Parts List - LineLazer V 200DC

Ref	Part	Description	Qty
1	287623	FRAME, linestriper, painted	1
6	101566	NUT, lock	12
7	193405	AXLE	1
9	198891	BRACKET	1
10	198930	ROD, brake	1
11	198931	BEARING	1
13	195134	SPACER, ball, guide	1
14	113961	SCREW, cap, hex hd	1
15	112960	SCREW, flange, hex	5
16	111040	NUT, lock, insert, nylock, 5/16	5
17	111020	WHEEL, pneumatic w/o sensor ring	1
	255162	WHEEL, pneumatic w/ sensor ring	2
18	112405	NUT, lock	2
19	112825	WASHER, belleville	4
20	114648	CAP, dust	2
21	15J088	SHIELD, distance sensor	1
22	15K452	SPACER, round	1
23	15K357	SENSOR, distance	1
24	108868	CLAMP, wire	2
25	260212	SCREW, hex washer hd, thd form	2
27	15K700	RING, sensor gear	1
28	15F910	BRACKET, cable	1
29	240991	BRACKET, caster, front	1
31	114982	SCREW, cap, flange hd	6
39	17H528	BRACKET, gun arm	1
40	24Y665	FRAME, handle upright, painted	1
41	17Y059	BRACE, right, painted	1
42	17Y058	BRACE, left, painted	1
43	128977	SCREW, cap button hd	4
48	17J125	BRACKET, slide	2
49	24Y641	BAR, handle	1
50	17J136	SCREW, hex, flange head	8
102	196176	ADAPTER, nipple	2
115	17J407	ARM, extension, bar, weldment	1
123	191239	HOSE, cpld, 3/8” x 11’10”	2
124	245227	HOSE, cpld, 1/4” x 7’	2
125	24V064	HOSE, suction/drain (includes 125a-125i)	2
125a	15F149	TUBE, suction	2
125b	194306	HOSE, fluid	2
125c	198119	FITTING, elbow, barbed	2
125d	101818	CLAMP, hose	2
125f	16X071	TUBE, drainline	2
125g	278722	GASKET, pail	2
125h	248008	HOSE, coupled, 1/4”x44”	2
125i	196180	BUSHING	2
127	15F369	BOX	1
157	114271	STRAP, retaining	2
158	108471	KNOB, pronged	1
159*	111145	KNOB, pronged	4
160	404989	STRAP, tie	9
161▲	17K394	LABEL, warning fire & skin	1
163*	24U241	KIT, pail, cover	1
164	187147	STRAINER, inlet	2
165	17J408	ARM, extension, third gun	1
224	17H721	CLAMP, wire, 5/8 dia.	2
258	17Y049	BRACKET, mount, pump, hydraulic, left	1
267	17Y047	BRACKET, mount, pump, hydraulic, right	
274	17J549	BRACKET, reservoir	1
276	15F441	BRACKET, frame	1
277	119696	SPRING, extension	1
308▲	17K392	LABEL, safety, warning	1
372	125626	SCREW, hex hd, flanged	3
399	16A719	WASHER, flat	1
400	197449	SPACER	1
402	114653	SCREW, cap, flange head	1
403*	17Y328	LABEL, identification, letter “A”	1
404*	17Y329	LABEL, identification, letter “B”	1
405*	17Y026	RESERVOIR, 11 gallon, left	1
406*	17Y025	RESERVOIR, 11 gallon, right	1
407	17Y054	PLATE, bucket holder	1
408	17P800	BUMPER	4
409	17Y050	BRACKET, reservoir, support	1
410	100133	WASHER, lock, 3/8	2
411	100575	SCREW, cap, hex hd	2
412	17Y055	SUPPORT, reservoir, front	1
413	17Y104	BRACKET, manifold, filter	1
415	100731	WASHER	2
418*	127375	PLUG, 3.0” hole	2
419*	16X081	BRACKET, dual tank retaining	2
420*	126108	SCREW, shoulder, socket head	2
424	155500	PACKING, o-ring	1
425	114967	COUPLING, pipe, 1”	2
426	189674	TUBE, intake	2
427	17Y903	BRACKET, weight	2
428	17Y900	BLOCK, weight, painted	2
429	100132	WASHER, flat	4

* *Available in Dual Hopper Kit 25N622.*

▲ *Replacement safety labels, tags, and cards are available at no cost.*

Parts Drawing - LineLazer V 200HS / 200DC

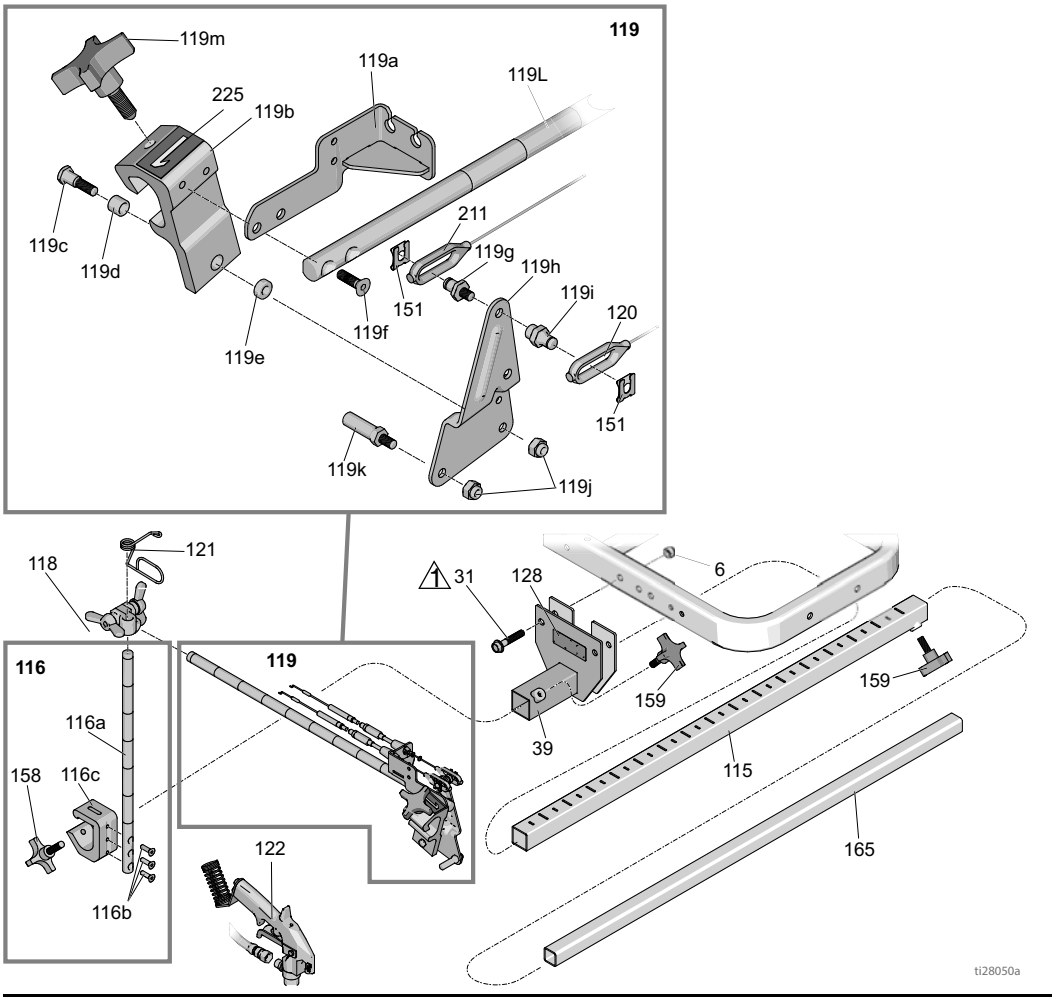

1 Torque to 17-23 ft-lbs (23.0-31.1 N·m)

2 Torque to 18-22 in-lbs (2.0-2.4 N·m)

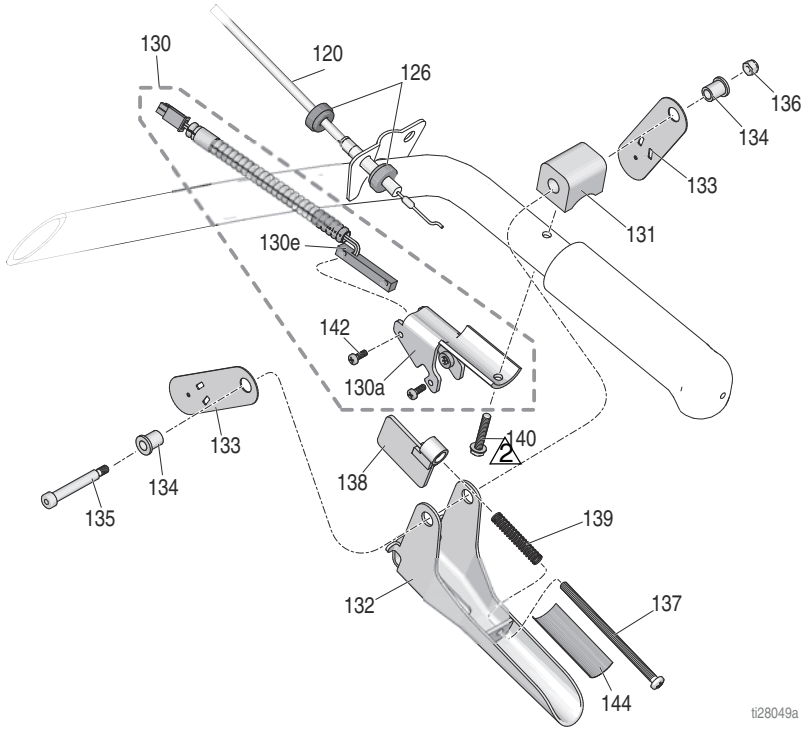

Parts List - LineLazer V 200HS / 200DC

Gun Holder and Arm

Ref.	Part	Description	Qty.
6	101566	NUT, lock	2
31	114982	SCREW, cap, flange hd	2
39	17H528	BRACKET, gun arm	1
115	17J407	ARM, extension, bar	1
116	17J424	BAR, height adjustment, assy	1
116a	17J139	BAR, gun, height, adjustment	1
116b	113428	SCREW, mach, hex, hd	3
116c	17J153	BRACKET, gun holder	1
118	24Y645	KIT, clamp, double wing nut	1
119	25A529	ARM, gun holder, linelazer (includes 151)	1
119a	24Y919	BRACKET, cable	1
119b*	15F216	HOLDER, gun	1
119c	17J575	FASTENER, special	1
119d*	119664	BEARING, sleeve	1
119e	17J576	SPACER, special	1
119f	119647	SCREW, cap, socket	2
119g	17H673	STUD, cable, gun	1
119h	15F214	LEVER, actuator	1
119i	17H674	ADAPTER, cable, gun	1
119j	102040	NUT, lock hex	2
119k	15F209	STUD, pull, trigger	1
119l	17J145	ARM, holder, gun	1
119m*	15F750	KNOB, holder, gun	1
120	25A488	CABLE, gun, manual (includes 126, 151)	1
121	188135	GUIDE, cable	1
122	248157	GUN, flex, basic	1
128▲	16P136	LABEL, safety, warning, iso	1
151	126111	RETAINER, circlip, external, 8mm	2
158	108471	KNOB, pronged	1
159	111145	KNOB, pronged	2
165	17J408	ARM, extension, third gun	1
211	25A487	CABLE, gun, automatic (includes 151, 212, 213)	1
225	17C043	LABEL, number “1”	1
	17C046	LABEL, number “2”	1

* *Included in Gun Holder Repair Kit 287569*
▲ *Replacement safety labels, tags, and cards are available at no cost.*

Gun Trigger

Ref.	Part	Description	Qty.
120	25A488	CABLE, gun, manual (includes 126, 151)	1
126	15F624	NUT, cable, gun (knurled)	2
130	25A636	BRACKET, trigger w switch	1
130a	276907	BRACKET, magnet	1
130e	17J237	SWITCH, reed	1
131	198896	BLOCK, mounting	1
132	245676	HANDLE	1
133	198895	PLATE, lever, pivot	2
134	111017	BEARING, flange	2
135	116941	SCREW, shoulder, skt hd	1
136	116969	NUT, lock	1
137	112381	SCREW, mach, pan head	1
138	117268	BRACKET, interrupter	1
139	117269	SPRING	1
140	128803	SCREW, thd forming, hex washer	1
142	117317	SCREW, plastite, pan head	2
144	17K587	LABEL, notice, adjustment	1

Parts Drawing - LineLazer V 200HS / 200DC

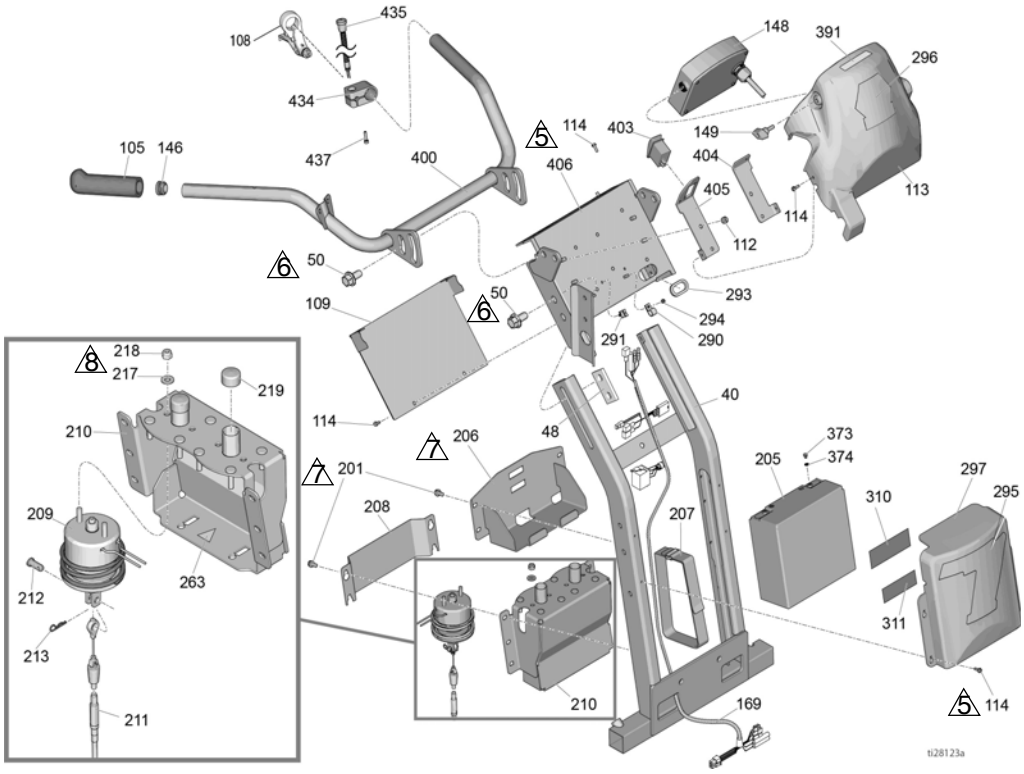

NOTICE

Do not allow the solenoid wires to make a sharp bend as shown. Doing so may lead to wire breakage. Place an approximate 0.75" radius bend in the wires exiting the solenoid.

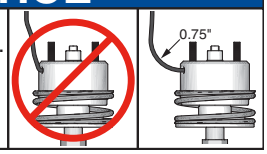

1. Torque to 35-45 ft-lbs (47.4-61.0 N·m)
2. Torque to 190-210 in-lbs (21.4-23.7 N·m)
3. Torque to 365-385 in-lbs (41.2-43.4 N·m)
4. Torque to 25-30 in-lbs (2.8-3.3 N·m)
5. Torque to 18-22 in-lbs (2.0-2.4 N·m)
6. Torque to 45-55 ft-lbs (61.0-74.5 N·m)
7. Torque to 130-150 in-lbs (14.6-16.9 N·m)
8. Torque to 65-75 in-lbs (7.3-8.4 N·m)

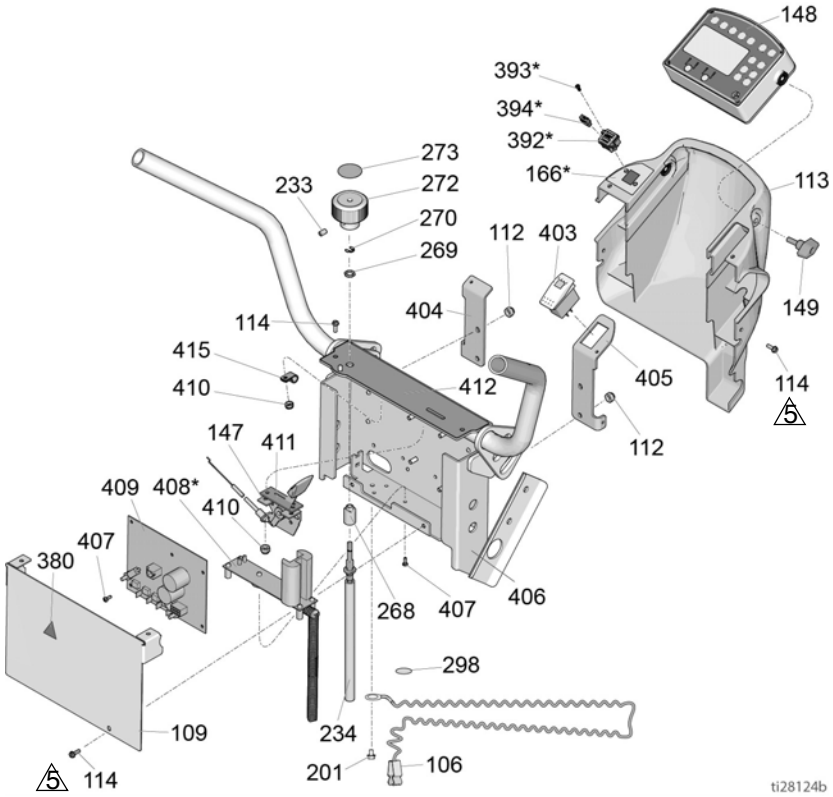

*HP Auto Series Only (408)

Filter - 200HS

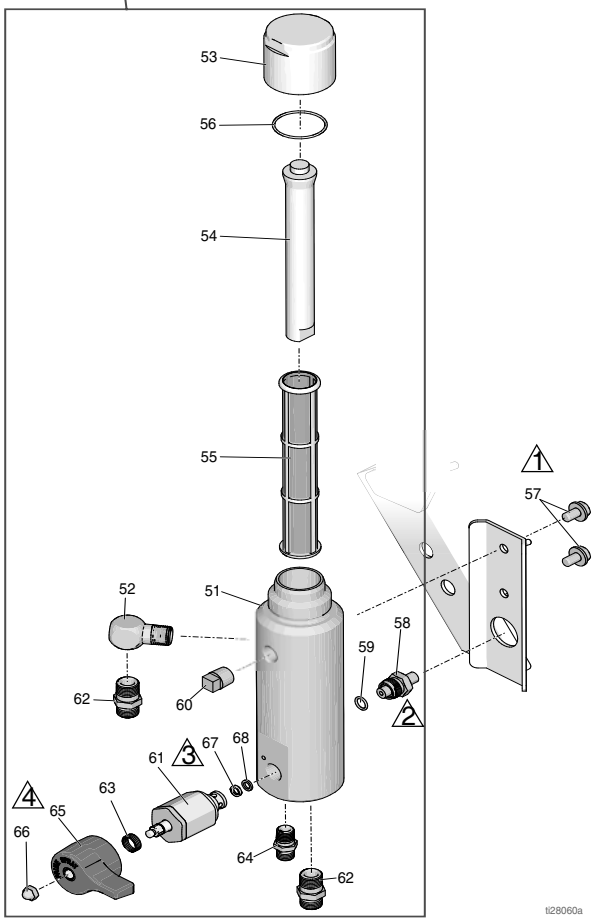

Parts List - LineLazer V 200HS / 200DC

Handle/Controls

Ref	Part	Description	Qty
40	24Y665	FRAME, handle upright, painted	1
48	17J125	BRACKET, slide	2
50	17J136	SCREW, hex, flange head	8
105	114659	GRIP, handle	2
106	237686	WIRE, ground, assembly	1
108	194310	LEVER, actuator	1
109	17J123	PLATE, cover	1
112	102040	NUT, lock, hex	4
113	17J135	COVER, control, painted (Standard Series)	1
	17V517	COVER, control, painted (HP Auto Series)	1
114	128978	SCREW, mach, slot hex wash hd	12
146	120151	PLUG	2
147	24Y643	CONTROL, throttle (includes 410, 411, 415)	1
148	25A498	BOX, control assembly (includes 149) (Series A)	1
	17W550	BOX, control assembly (includes 149) (Series B)	1
	25N791	BOX, control assembly (includes 149) (Series C)	1
149	16W408	KNOB, t-handle, 1/4-20 thd stud	2
166*	17V520	LABEL, usb	1
	16D576	LABEL, made in USA (Standard Series)	1
169	17J617	WIRE, harness	1
201	107257	SCREW, thd forming	10
205*	24X370	BATTERY, 22 AH, sealed (includes 373, 374)	1
206*	17H644	SHELF, battery	1
207*	126949	STRAP, battery	1
208*	17H650	COVER, solenoid, automatic	1
209*	25A486	SOLENOID, module (includes 212, 213, 217, 218)	1
210*	24Y777	BRACKET, solenoid	1
211*	25A487	CABLE, gun, solenoid, auto (includes 151, 212, 213)	1
212*	128711	PIN, clevis, 5/16	1
213*	15R598	CLIP, cotter, hairpin	1
217*	110755	WASHER, plain	2
218*	121114	NUT, hex, self locking	2
219*	128712	CAP, dust	2
233	101962	SCREW, set, sch	2
234	25A255	SHAFT, flexible	1
263*	15H108	LABEL, safety, warning, pinch	1
268	17H698	BUSHING, pressure control, mount	1
269	119775	NUT, panel	1
270	115999	RING, retaining	1
272	16Y408	KNOB, pressure control	1
273	15A464	LABEL, control	1
290	128856	CLAMP	2
291	114687	CLIP, retainer	2
293	17H701	GROMMET	1
294	115483	NUT	2
295	17K378	LABEL	1
296	17K379	LABEL	1
297	17K377	COVER, battery, painted	1
298	16W503	LABEL, safety, ground	1
310*	17K397	LABEL	1
311*	17K396	LABEL	1
373*	128131	SCREW	2
374*	111307	WASHER	2
380	189930	LABEL, caution	1
391	17P925	LABEL, A+ Service, QR	1
392*	17Z084	BOARD, assembly (includes 166, 393, 394)	1
393*	17V519	SCREW, pan hd	2
394*	131718	COVER, dust, usb	2
400	24Y641	BAR, handle	1
403	128855	SWITCH, rocker	1
404	17J126	BRACKET, shroud	1
405	17J128	BRACKET, switch	1
406	24Y642	PLATE, control	1
407	120593	SCREW, mach, torx	11
408*	25A495	KIT, repair, charger board (includes 407)	1
409	25A493	KIT, repair, main board, standard series (includes 407) (Series B)	1
	25A494	KIT, repair, main board, HP auto series (includes 407) (Series B)	1
	25N788	KIT, repair, main board, standard series (includes 407) (Series C)	1
	25N789	KIT, repair, main board, HP auto series (includes 407) (Series C)	1
410	111280	NUT, locking	3
411	15F776	GASKET, throttle	1
412	17J456	LABEL	1
415	119736	CLAMP	1
434*	15K162	BLOCK	1
435*	17J236	SWITCH, push button	1
437*	C20004	SCREW, cap	1

**HP Auto Series only*

Filter - 200HS

Ref	Part	Description	Qty
51	17K166	MANIFOLD	1
52	196179	FITTING, elbow, street	1
53	287285	CAP, filter (includes 54, 56)	1
54	15C766	TUBE, diffusion	1
55	25A465	FILTER, fluid	1
56	117285	PACKING, o-ring	1
57	111801	SCREW, cap, hex hd	2
58	24N516	TRANSDUCER, pressure control (includes 59)	1
59	111457	O-RING	1
60	15G331	PLUG, pipe	1
61	245103	VALVE, drain, assy (includes 63, 65, 66, 67, 68)	1
62	196178	ADAPTER, nipple	2
63	114708	SPRING, compression	1
64	196181	FITTING, nipple	1
65	15G563	HANDLE, valve	1
66	116424	NUT, cap	1
67	193709	SEAT, valve	1
68	193710	SEAL, seat, valve	1
80	25A877	KIT, repair, filter manifold	1

Parts Drawing - LineLazer V 200DC

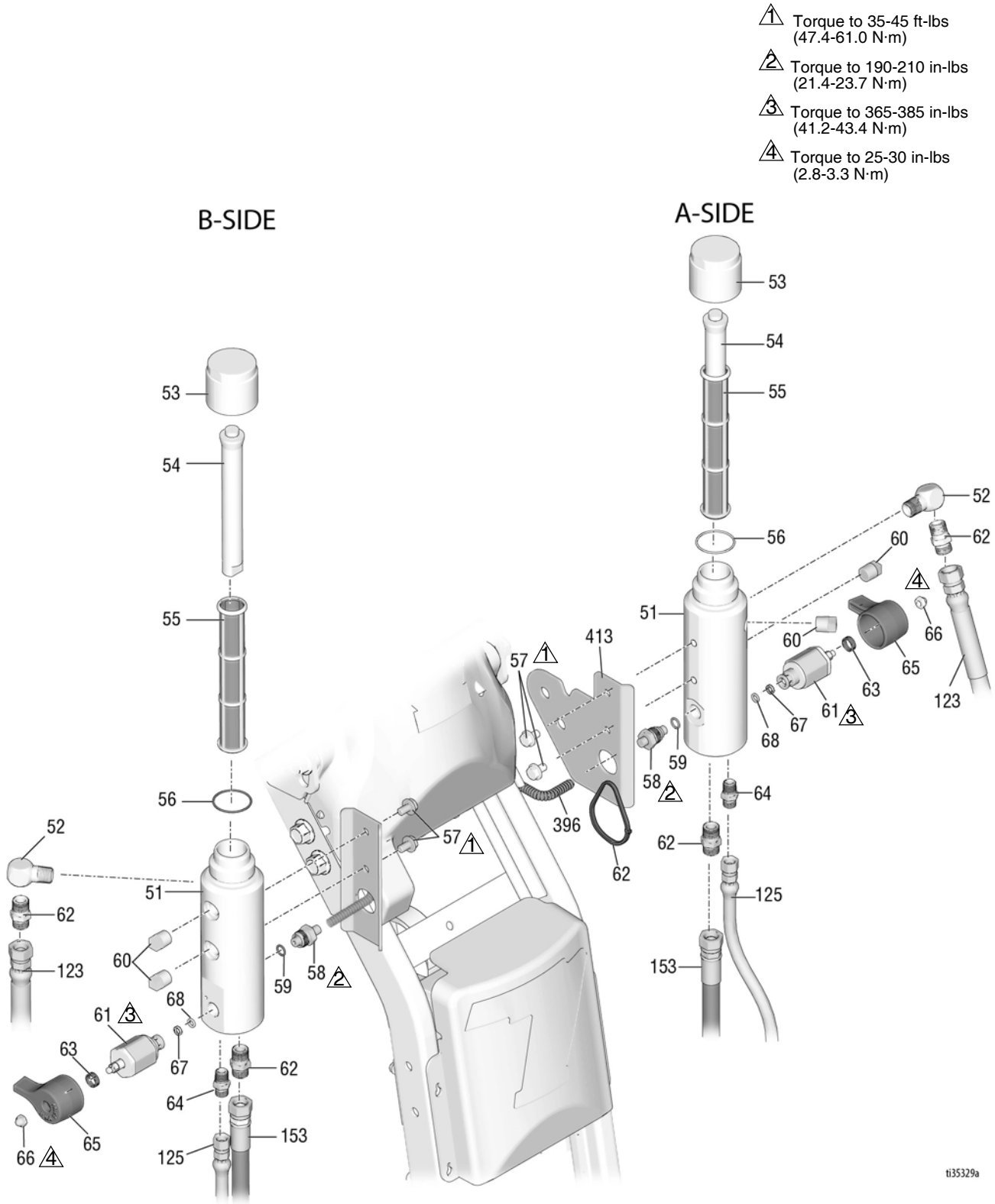

Parts List - LineLazer V 200DC

Filters A & B

Ref	Part	Description	Qty
51†	17K166	MANIFOLD	1
52†	196179	FITTING, elbow, street	1
53†	17E680	CAP, filter	1
54†	15C766	TUBE, diffusion	2
55†	24V455	FILTER, fluid	1
56†	117285	PACKING, o-ring	1
57	111801	SCREW, cap, hex hd	2
58†	248024	TRANSDUCER, pressure control	2
59†	111457	PACKING, o-ring	2
60†	15G331	PLUG, pipe	1
61†	287879	VALVE, drain, assy	1
62†	196178	ADAPTER, nipple	1
63†	114708	SPRING, compression	1
64†	196181	FITTING, nipple	1
65†	15G563	HANDLE, valve	1
66†	116424	NUT, cap	1
67†	193709	SEAT, valve	1
68†	193710	SEAL, seat, valve	1
123	191239	HOSE, cpld, 3/8” x 11’ 10”	2
125	24V064	HOSE, suction/drain	2
153	245226	HOSE, cpld, 3/8” x 3’	1
197	17H720	STRAP, tie, black, 5”	1
396	17Y320	CONDUIT, sleeve, round, 7”	1
413	17Y104	BRACKET, manifold, filter	1

Filter Manifold ‘A’ Kit, P/N 25N741
Filter Manifold ‘B’ Kit, P/N 25N742
† *Included in Manifold ‘A’ or ‘B’ Kit*

Parts Drawing - LineLazer V 200HS

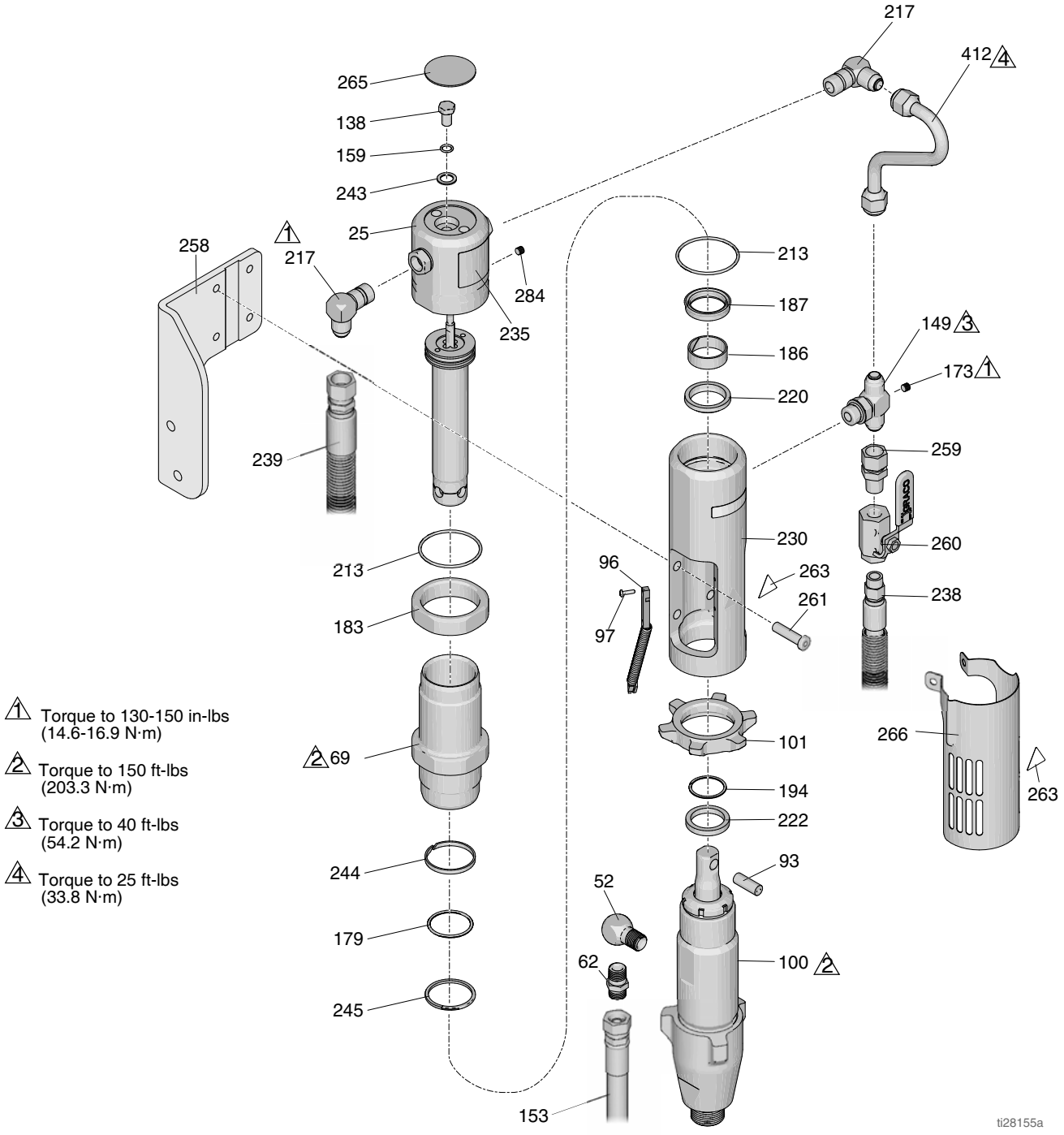

Parts List - LineLazer V 200HS

Ref.	Part	Description	Qty.
25	288754	KIT, repair, trip rod/piston	1
52	196179	FITTING, elbow, street	1
62	196178	ADAPTER, nipple	2
69	246176	KIT, repair, sleeve, cylinder	
93	197443	PIN, pump	1
96	119720	SWITCH, reed w/ connector	1
97	114528	SCREW, mach, phillips, pnhd	2
100	277068	PUMP, displacement	1
138*	106276	SCREW, cap, hex head	1
101	193394	NUT, retaining	1
149	119841	FITTING, tee, branch, str thd	1
159*	155685	PACKING, o-ring	1
153	245226	HOSE, coupled 3/8 x 3’	1
173	100139	PLUG, pipe	1
179*‡	108014	PACKING, o-ring	1
183	15A726	NUT, jam	1
186*	112342	BEARING, rod	1
187‡	112561	PACKING, block	1
194	116551	RING, retainer	1
213*‡	117283	PACKING, o-ring	2
217	117607	FITTING, elbow, std thd	2
220*‡	117739	WIPER, rod	1
222	287186	KIT, repair, magnet	1
230	15A728	MANIFOLD, adapter	1
235	15B804	LABEL, graco logo	1
238	287175	HOSE, hydraulic, supply	1
243*	178179	WASHER, sealing	1
239	287176	KIT, repair, hose	1
244*‡	178207	BEARING, piston	
245*‡	178226	SEAL, piston	1
258	17H681	BRACKET, mount, pump, hydraulic	1
259	117328	FITTING, nipple, straight	1
260	117441	VALVE, ball	1
261	107210	SCREW	4
263*▲	15H108	LABEL, warning, pinch point	2
265▲	15B063	LABEL, safety, warning, hot surface	1
266	24X474	COVER, assy, pump rod	1
284*	100139	PLUG, pipe	
412	15F519	TUBE, hydraulic, supply	1

* *Included in Trip Rod/Piston/Cap Repair Kit 288754*
‡ *Included in Hydraulic Seal Repair Kit 246174*
▲ *Replacement safety labels, tags, and cards are available at no cost.*

Parts Drawing - LineLazer V 200DC

1 Torque to 130-150 in-lbs (14.6-16.9 N·m)

2 Torque to 150 ft-lbs (203.3 N·m)

3 Torque to 40 ft-lbs (54.2 N·m)

4 Torque to 25 ft-lbs (33.8 N·m)

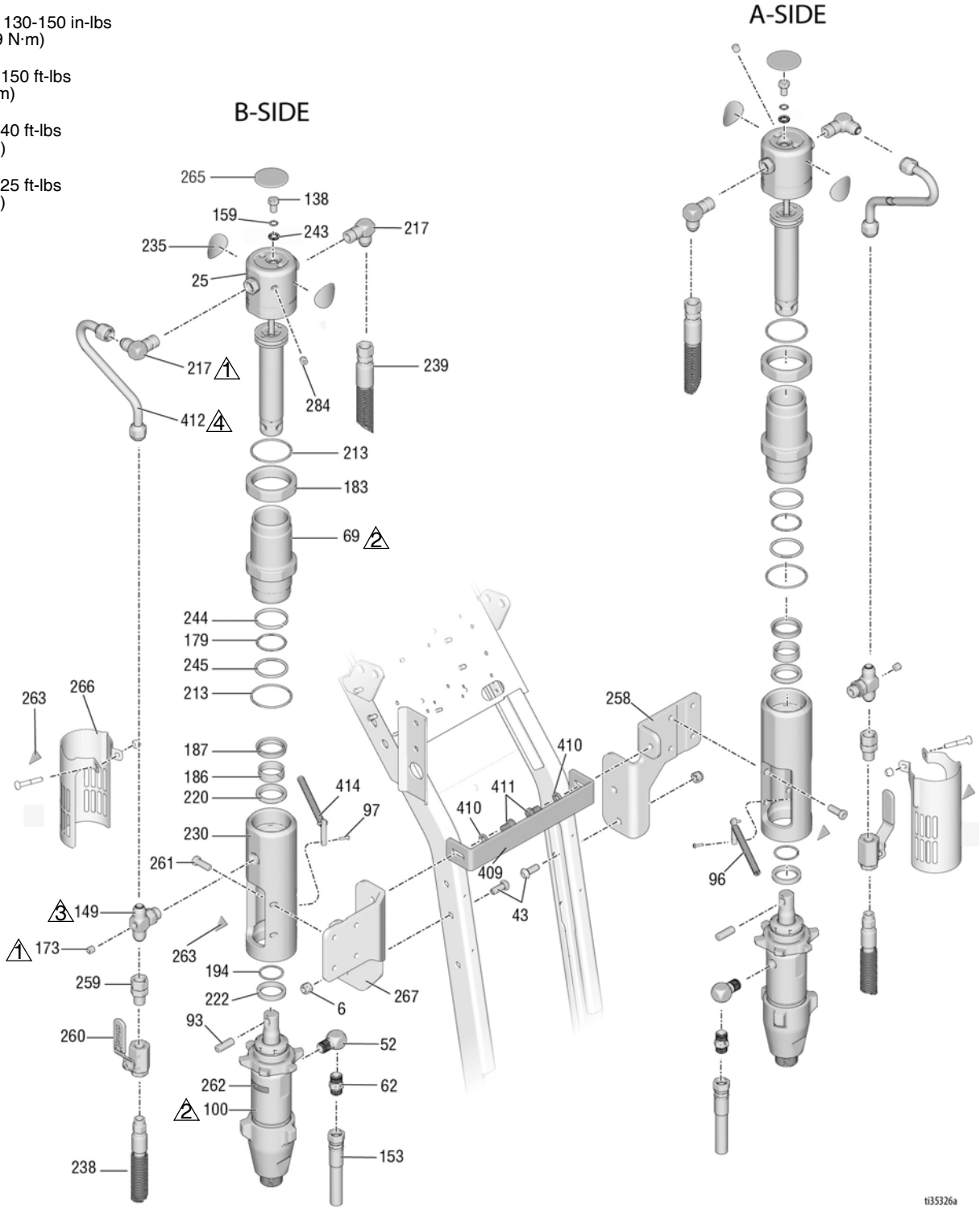

Parts List - LineLazer V 200DC

Ref.	Part	Description	Qty.
6	101566	NUT, lock	4
25	288754	KIT, repair, trip rod/piston	2
43	128977	SCREW, cap, button head, 3/8 x 1.0	4
52	196179	FITTING, elbow, street	2
62	196178	ADAPTER, nipple	2
69	246176	KIT, repair, sleeve, cylinder	2
93	197443	PIN, pump	2
96	119720	SWITCH, reed ‘A’ side	1
97	114528	SCREW, mach, phillips, pnhd	4
100	277068	PUMP, displacement	2
138*	106276	SCREW, cap, hex head	2
149	119841	FITTING, tee, branch, str thd	2
153	245226	HOSE, coupled 3/8 x 3’	2
159*	155685	PACKING, o-ring	2
173	100139	PLUG, pipe	2
179*‡	108014	PACKING, o-ring	2
183	15A726	NUT, jam	2
186*	112342	BEARING, rod	2
187‡	112561	PACKING, block	2
194	116551	RING, retainer	2
213*‡	117283	PACKING, o-ring	4
217	117607	FITTING, elbow, std thd	4
220*‡	117739	WIPER, rod	2
222	287186	KIT, repair, magnet	2
230	15A728	MANIFOLD, adapter	2
235	17Y328	LABEL, “A”	2
	17Y329	LABEL “B”	2
238	287175	HOSE, hydraulic, supply	2
243*	178179	WASHER, sealing	2
239	287176	KIT, repair, hose	2
244*‡	178207	BEARING, piston	2
245*‡	178226	SEAL, piston	2
258	17Y049	BRACKET, mount, pump, hydraulic, left	1
259	117328	FITTING, nipple, straight	2
260	117441	VALVE, ball	2
261	107210	SCREW	8
262	194072	LABEL, endurance pump	2
263*▲	15H108	LABEL, warning, pinch point	4
265▲	15B063	LABEL, safety, warning, hot surface	2
266	24X474	COVER, assy, pump rod	2
267	17Y047	BRACKET, mount, pump, right	1
284+	100139	PLUG, pipe	2
412	15F519	TUBE, hydraulic, supply	2
217	110755	WASHER, plain	4
213	15R598	CLIP, cotter, hairpin	2
409	17Y050	BRACKET, reservoir, support, rear	1
410	100133	WASHER, lock, 3/8	2
411	100575	SCREW, cap, hex hd	2
414	131774	SWITCH, reed, ‘B’ side	1

* *Included in Trip Rod/Piston/Cap Repair Kit 288754*
‡ *Included in Hydraulic Seal Repair Kit 246174*
▲ *Replacement safety labels, tags, and cards are available at no cost.*

Parts Drawing - LineLazer V 200HS / 200DC

⚠1 Torque to 115-135 in-lbs (12.9-15.2 N·m)

⚠2 Torque to 190-210 in-lbs (21.4-23.7 N·m)

⚠3 Torque to 58-62 in-lbs (6.5-7.0N·m)

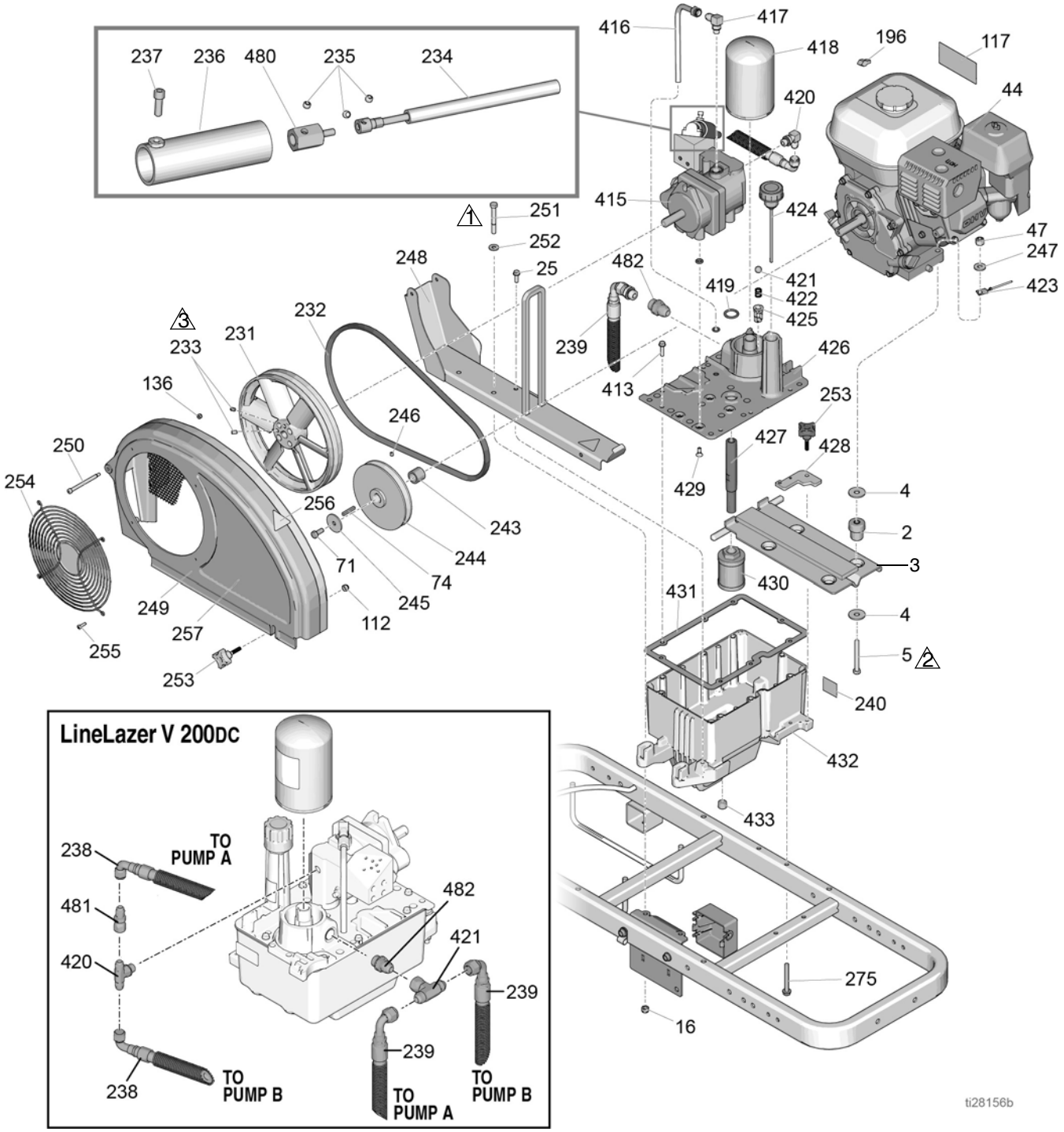

Parts List - LineLazer V 200HS / 200DC

Ref.	Part	Description	Qty.
2	15E888	DAMPENER, motor mount	4
3	15F485	BRACKET, mount, engine	1
4	108851	WASHER, plain	8
5	113664	SCREW, cap, hex hd	4
16	111040	NUT, lock, insert, nylock, 5/16	2
25	260212	SCREW, hex, washer hd, thd form	2
44	116080	ENGINE	1
	25P296	ENGINE (China only)	1
47	110838	NUT, lock	4
71	108842	SCREW, cap, hex hd	1
74	117632	KEY, square, 3/16 x 1.25	1
112	102040	NUT, lock, hex	1
117▲	194126	LABEL, warning	1
136	116969	NUT, lock	1
196	114956	TERMINAL, wire tap, insulated	1
231	16U205	PULLEY, fan	1
232	119433	BELT	1
233	120087	SCREW, set, 1/4 x 1/2	2
234	25A255	SHAFT, flexible, hydraulic control	1
235	112303	SCREW, set, socket w/ patch	3
236	15C958	GUARD, pressure control	1
237	112166	SCREW, cap, sch	7
239	15C364	HOSE, hydraulic, return	2
240	15K440	LABEL, brand, GH EH cooling	1
243	15B314	SLEEVE, motor shaft	1
244	15E758	PULLEY, 5.50 in.	1
245	112717	WASHER	1
246	100002	SCREW, set, sch	1
247	100023	WASHER, flat	4
248	288261	RAIL, belt guard, assy	1
249	288734	GUARD, belt (includes 136, 250, 254, 255)	1
250	119434	SCREW, shoulder, skt hd	1
251	802277	SCREW, machine	2
252	100527	WASHER, plain	2
253	15D862	NUT, hand	2
254	117284	GRILL, fan, guard	1
255	115477	SCREW, mach, torx pan hd	4
256▲	16M768	LABEL, warning, entanglement	2
257	17H689	LABEL, brand, LLV 200 HS	1
	17Y292	LABEL, brand, LLV 200DC	1
275	120981	SCREW, mach, hex washer hd	2
413	119426	SCREW, mach, hex washer hd	8
414	107188	PACKING, o-ring	4
415	287179	KIT, repair, pump (includes 235, 414, 419, 429, 480)	1
416	246167	KIT, repair, case drain	1
417	110792	FITTING, elbow, male, 90°	1
418	246173	KIT, repair, oil filter	1
419	156401	PACKING, o-ring	1
420	116829	FITTING, elbow, hydraulic (200HS)	1
	17V730	FITTING, tee (200DC)	1
421	100084	BALL, metallic	1
422	116967	SPRING, compression	1
423	240997	CONDUCTOR, ground	1
424	120726	CAP, breather, filler	1
425	198841	RETAINER, ball, pressure bypass	1
426	15M057	COVER, reservoir	1
427	15E587	TUBE, suction	1
428	15E476	BRACKET, retainer, motor	1
429	117471	SCREW, mach, hex flat head	4
430	116919	FILTER, screen, suction	1
431	120604	GASKET, reservoir	1
432	15J513	TANK, reservoir	1
433	101754	PLUG, pipe, 3/8 nptf	1
480	16Y407	ADAPTER	1
481	127596	FITTING, swivel (200DC)	1
482	120184	FITTING, hydraulic	1

▲ *Replacement safety labels, tags, and cards are available at no cost.*

Parts Drawing - LineLazer V 200HS / 200DC

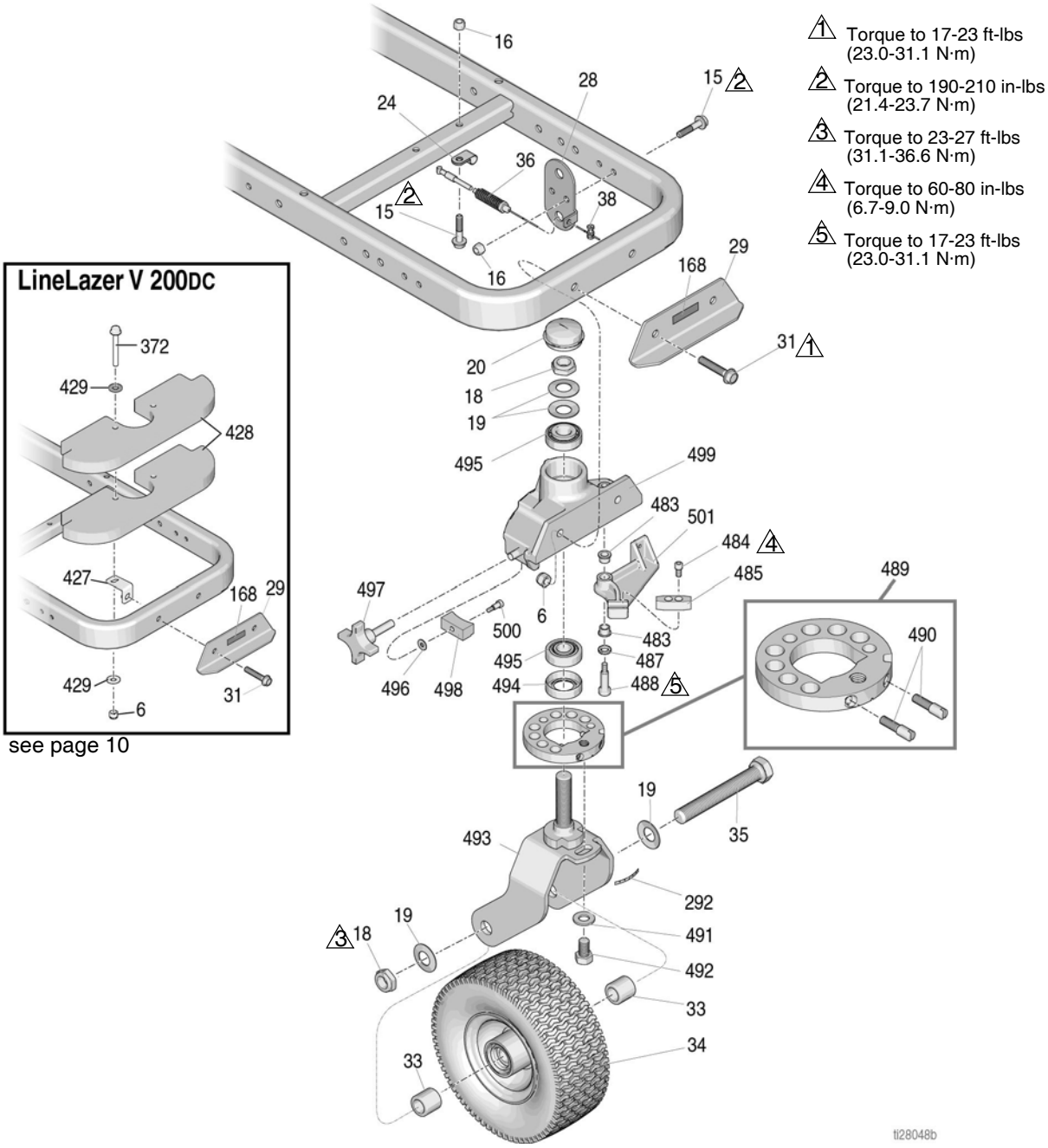

Parts List - LineLazer V 200HS / 200DC

Ref	Part	Description	Qty
6	101566	NUT, lock	2
15	112960	SCREW, cap, flange hd	3
16	111040	NUT, lock, insert, nylon, 5/16	3
18*‡	112405	NUT, lock	2
19*‡	112825	WASHER	4
20*‡	114648	CAP, dust	1
24	108868	CLAMP, wire	1
28‡	15F910	BRACKET, cable	1
29	240991	BRACKET, caster, front	1
	25N653	KIT, weight, front	1
31	114982	SCREW, cap, flange hd	2
33*‡	193658	SPACER, seal	2
34*	114549	WHEEL, pneumatic	1
35*	113471	SCREW, cap, hex hd	1
36‡	241445	CABLE	1
38‡	114802	STOP, wire	1
168	17H683	LABEL, EZ-Align	1
292*‡	17H489	LABEL, disk adjustment	1
372	125626	SCREW, hex, hd, flanged	2
427	17Y903	BRACKET, weight	2
428	17Y900	BLOCK, weight	2
429	100132	WASHER, flat	4
483*‡	114548	BEARING, bronze	2
484*‡	110754	SCREW, cap, sch	2
485*‡	193662	STOP, wedge	1
487*‡	15J603	SPACER, round	1
488*‡	120476	BOLT, shoulder	1
489*‡	17H486	DISK, adjuster, assembly	1
490*‡	17G762	SCREW, disk adjuster	2
491*‡	113962	WASHER	1
492*	114681	SCREW, cap, hex hd	1
493*‡	17H485	FORK	1
494*‡	113484	SEAL, grease	1
495*‡	113485	BEARING, cup/cone	2
496*‡	112776	WASHER, plain	1
497*‡	181818	KNOB, pronged	1
498*‡	193661	JAW	1
499*‡	15G952	CASTER	1
500*‡	108483	SCREW, shoulder	1
501*‡	193528	ARM, detent	1

* *Included in Swivel Wheel Repair Kit 240719*
‡ *Included in Swivel Wheel Repair Kit 241105*
† *Included in Weight Kit 25N653*

Wiring Diagram 200HS (Standard Series)

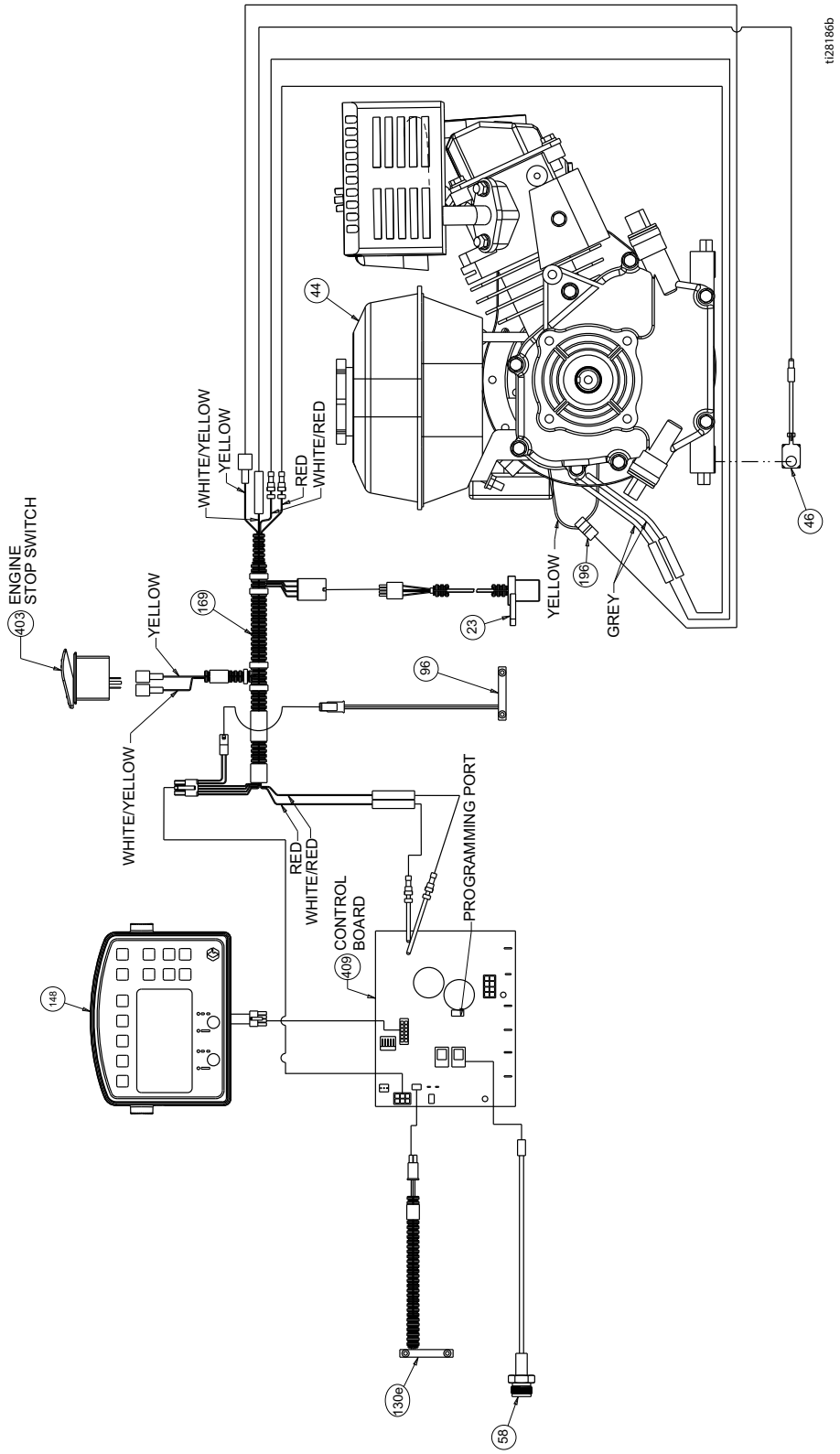

Wiring Diagram 200DC (Standard Series)

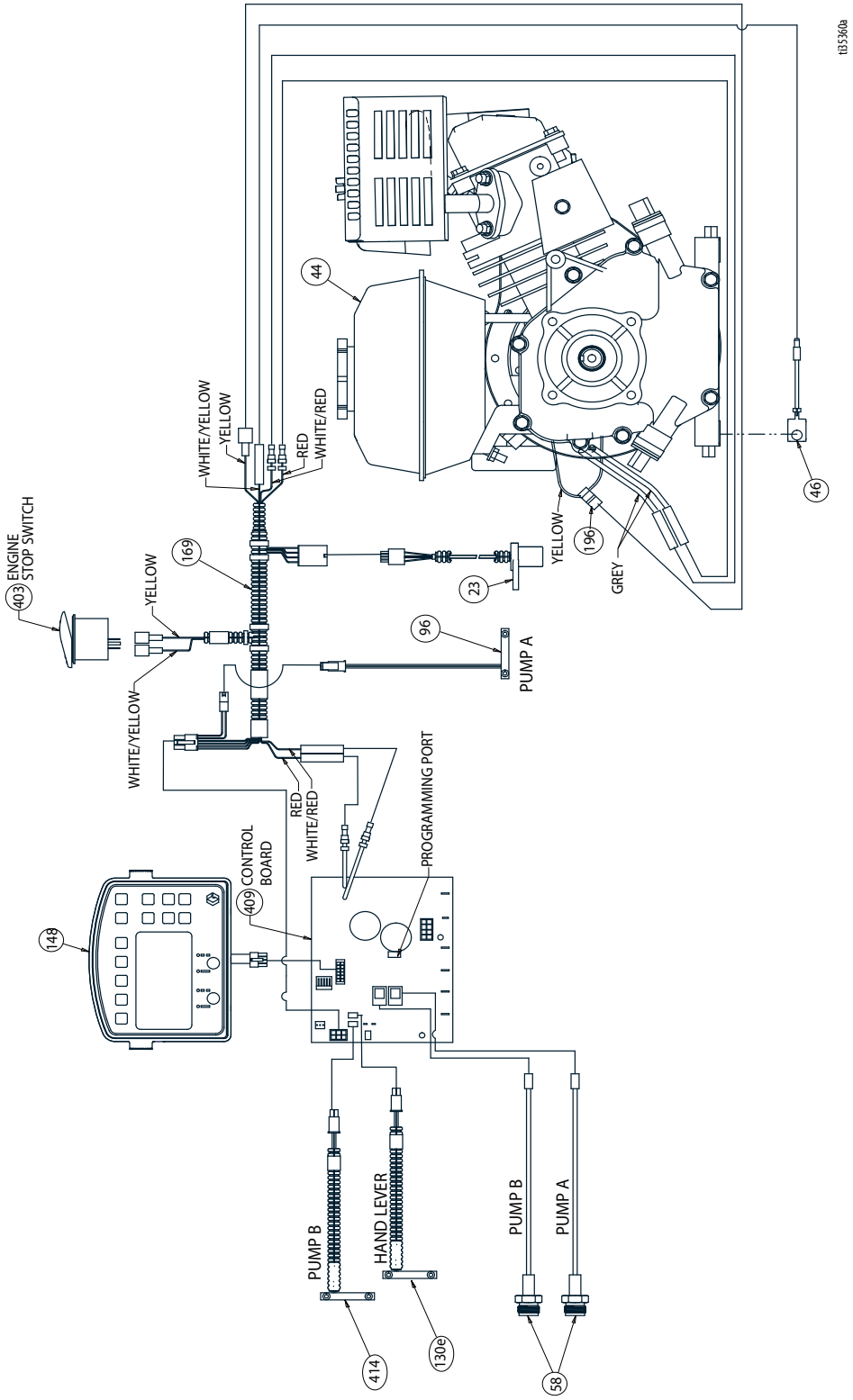

Wiring Diagram 200HS (HP Auto Series/HP Reflective Series)

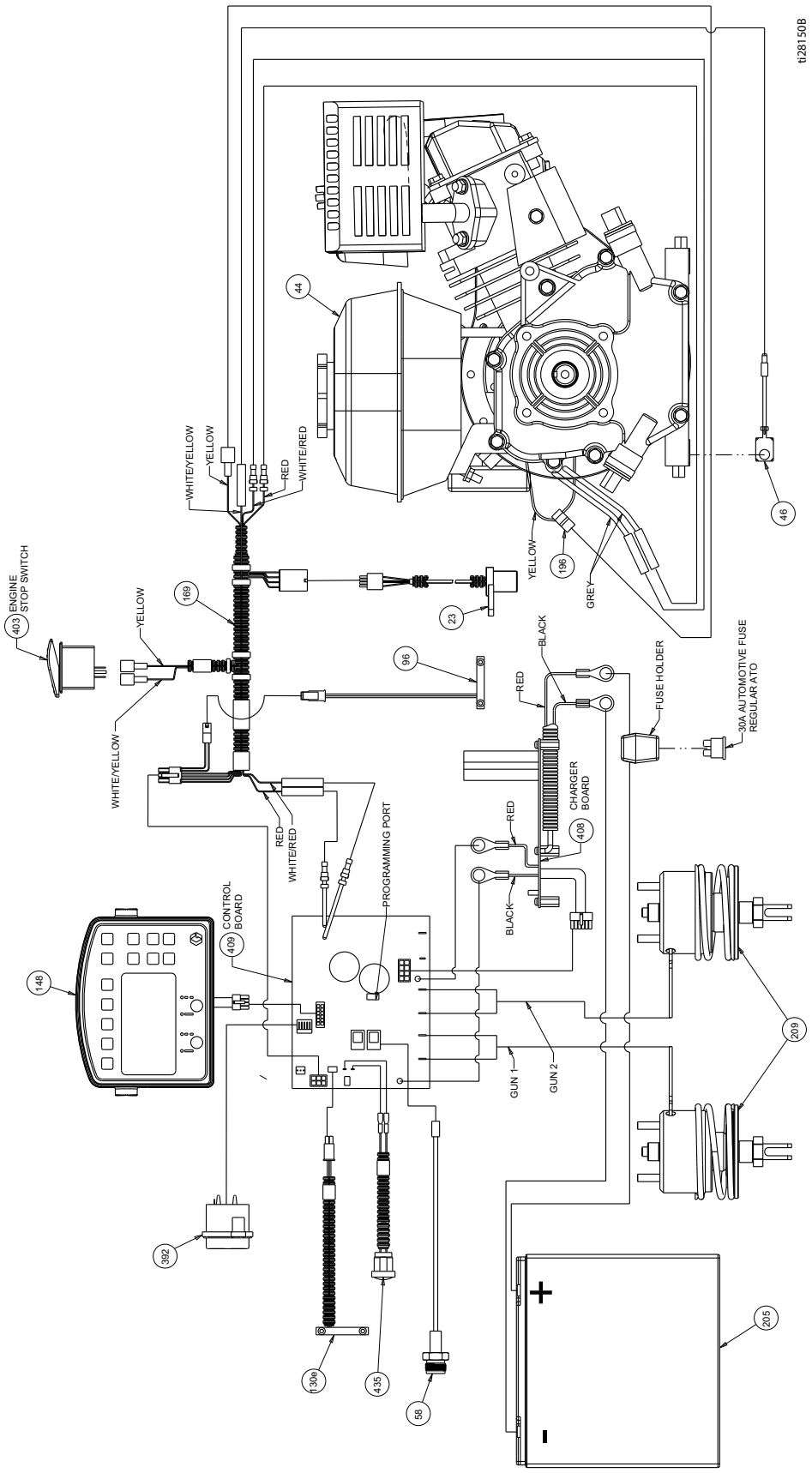

Wiring Diagram 200DC (HP Auto Series/HP Reflective Series)

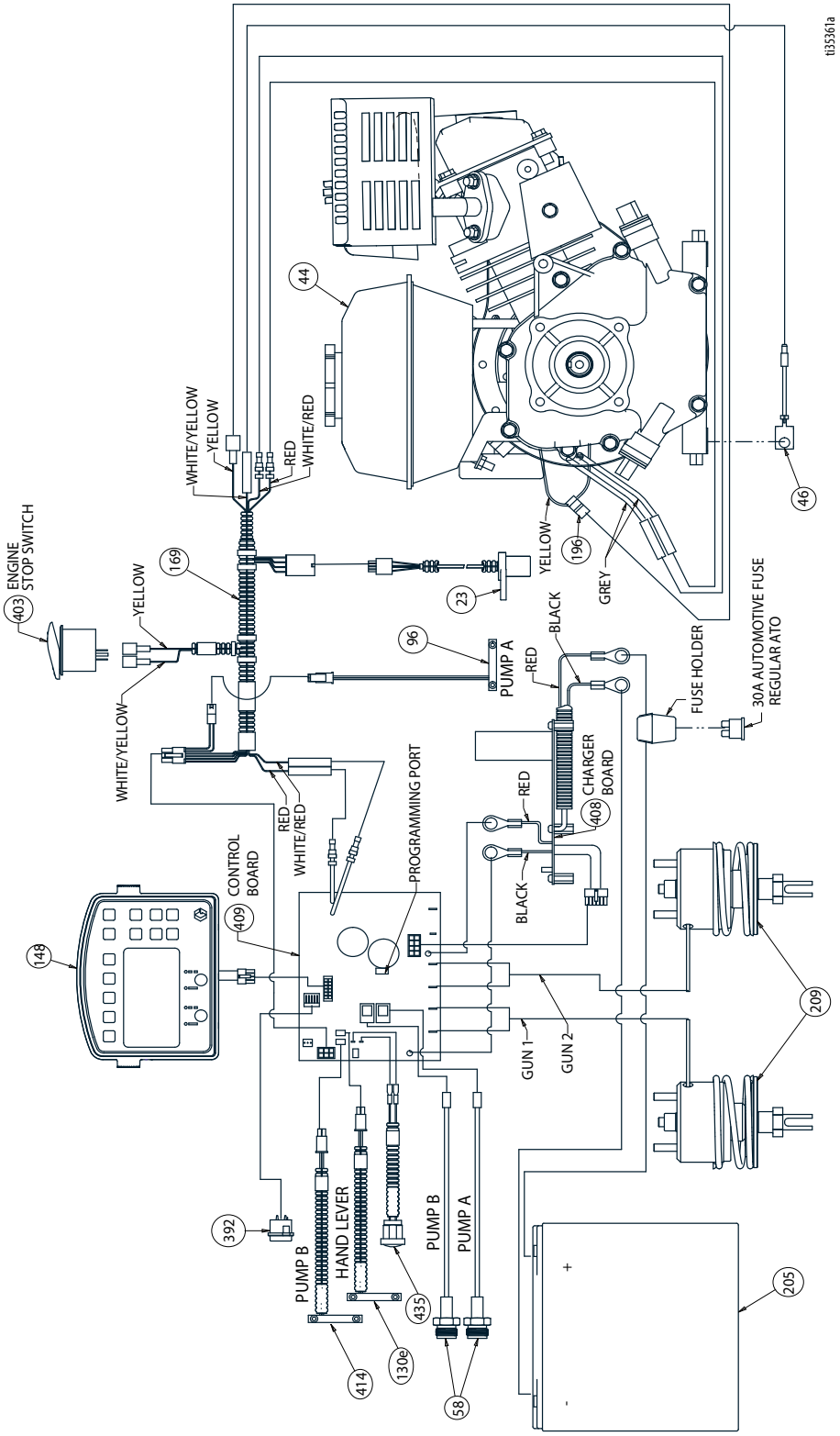

Technical Specifications

LineLazer V 200HS Standard Series (Models 17H459, 17H461)		
	U.S.	**Metric**
Dimensions		
Height (with handle bar down)	Unpackaged - 44.5 in. Packaged - 52.5 in.	Unpackaged - 113.03 cm Packaged - 133.35 cm
Width	Unpackaged - 34.25 in. Packaged - 37.0 in.	Unpackaged - 87.0 cm Packaged - 93.98 cm
Length (with platform down)	Unpackaged - 68.75 in. Packaged - 73.5 in.	Unpackaged - 174.63 cm Packaged - 186.69 cm
Weight (dry - no paint)	Unpackaged - 306 lbs Packaged - 373 lbs	Unpackaged - 139 kg Packaged - 169 kg
Noise (dBa)		
Sound Power per ISO 3744:	103.1	
Sound Pressure measured at 3.3 feet (1m):	86.5	
Vibration (m/s^2) (8 hours daily exposure)		
Hand Arm (per ISO 5349)	1.6	
Whole Body (per ISO 2631)	0.4	
Power Rating (Horse Power)		
Power Rating (Horse Power) per SAE J1349	6.5 HP @ 3600 rpm	4.84 kW @ 3600 rpm
Maximum Delivery	2.15 gpm	8.14 lpm
Maximum Tip Size 1 gun 2 gun	 .047 .034	
Inlet paint strainer	16 mesh	1190 micron
Outlet paint strainer	50 mesh	297 micron
Pump inlet size	1 in. NSPM (m)	
Pump outlet size	3/8 NPT (f)	
Maximum working pressure	3300 psi	228 bar, 22.8 MPa
Maximum fluid working pressure	3300 psi	228 bar, 22.8 MPa
Maximum free-flow delivery	2.15 gpm	8.14 lpm
Cycles per gallon/liter	62 cpg	16.4 cpl
Hydraulic reservoir capacity	1.25 gallons	4.73 liters
Hydraulic pressure	1825 psi	124 bar
Electrical Capacity	84 W @ 3800 rpm	
Battery	12V, 22Ah, Sealed lead acid, Deep cycle	

Wetted Parts: PTFE, Nylon, polyurethane, V-Max, UHMWPE, fluoroelastomer, acetal, leather, tungsten carbide, stainless steel, chrome plating, nickel-plated carbon steel, ceramic

LineLazer V 200DC Standard Series (Model 17Y231)		
	U.S.	**Metric**
Dimensions		
Height (with handle bar down)	Unpackaged - 44.5 in. Packaged - 52.5 in.	Unpackaged - 113.03 cm Packaged - 133.35 cm
Width	Unpackaged - 34.25 in. Packaged - 37.0 in.	Unpackaged - 87.0 cm Packaged - 93.98 cm
Length (with platform down)	Unpackaged - 68.75 in. Packaged - 73.5 in.	Unpackaged - 174.63 cm Packaged - 186.69 cm
Weight (dry - no paint)	Unpackaged - 411lbs Packaged - 477 lbs	Unpackaged - 186 kg Packaged - 216 kg
Noise (dBa)		
Sound Power per ISO 3744:	103.1	
Sound Pressure measured at 3.3 feet (1m):	86.5	
Vibration (m/s^2) (8 hours daily exposure)		
Hand Arm (per ISO 5349)	1.6	
Whole Body (per ISO 2631)	0.4	
Power Rating (Horse Power)		
Power Rating (Horse Power) per SAE J1349	6.5 HP @ 3600 rpm	4.84 kW @ 3600 rpm
Maximum Delivery	2.15 gpm	8.14 lpm
Maximum Tip Size 1 gun 2 gun	 .047 .034	
Inlet paint strainer	16 mesh	1190 micron
Outlet paint strainer	50 mesh	297 micron
Pump inlet size	1 in. NSPM (m)	
Pump outlet size	3/8 NPT (f)	
Maximum working pressure	3300 psi	228 bar, 22.8 MPa
Maximum fluid working pressure	3300 psi	228 bar, 22.8 MPa
Maximum free-flow delivery	2.15 gpm	8.14 lpm
Cycles per gallon/liter	62 cpg	16.4 cpl
Hydraulic reservoir capacity	1.25 gallons	4.73 liters
Hydraulic pressure	1825 psi	124 bar
Electrical Capacity	84 W @ 3800 rpm	
Battery	12V, 22Ah, Sealed lead acid, Deep cycle	

Wetted Parts: PTFE, Nylon, polyurethane, V-Max, UHMWPE, fluoroelastomer, acetal, leather, tungsten carbide, stainless steel, chrome plating, nickel-plated carbon steel, ceramic

LineLazer V 200HS HP Auto Series (Models 17K582, 17H462, 17K637, 17H463,17K583, 17H464)		
	U.S.	**Metric**
Dimensions		
Height (with handle bar down)	Unpackaged - 44.5 in. Packaged - 52.5 in.	Unpackaged - 113.03 cm Packaged - 133.35 cm
Width	Unpackaged - 34.25 in. Packaged - 37.0 in.	Unpackaged - 87.0 cm Packaged - 93.98 cm
Length (with platform down)	Unpackaged - 68.75 in. Packaged - 73.5 in.	Unpackaged - 174.63 cm Packaged - 186.69 cm
Weight (dry - no paint)	Unpackaged - 322 lbs Packaged - 389 lbs	Unpackaged - 146 kg Packaged - 176 kg
Noise (dBa)		
Sound Power per ISO 3744:	103.1	
Sound Pressure measured at 3.3 feet (1m):	86.5	
Vibration (m/s^2) (8 hours daily exposure)		
Hand Arm (per ISO 5349)	1.6	
Whole Body (per ISO 2631)	0.4	
Power Rating (Horse Power)		
Power Rating (Horse Power) per SAE J1349	6.5 HP @ 3600 rpm	4.84 kW @ 3600 rpm
Maximum Delivery	2.15 gpm	8.14 lpm
Maximum Tip Size 1 gun 2 gun	 .047 .034	
Inlet paint strainer	16 mesh	1190 micron
Outlet paint strainer	50 mesh	297 micron
Pump inlet size	1 in. NSPM (m)	
Pump outlet size	3/8 NPT (f)	
Maximum working pressure	3300 psi	228 bar, 22.8 MPa
Maximum fluid working pressure	3300 psi	228 bar, 22.8 MPa
Maximum free-flow delivery	2.15 gpm	8.14 lpm
Cycles per gallon/liter	62 cpg	16.4 cpl
Hydraulic reservoir capacity	1.25 gallons	4.73 liters
Hydraulic pressure	1825 psi	124 bar
Electrical Capacity	84 W@ 3600 rpm	
Battery	12V, 22Ah, Sealed lead acid, Deep cycle	

Wetted Parts: PTFE, Nylon, polyurethane, V-Max, UHMWPE, fluoroelastomer, acetal, leather, tungsten carbide, stainless steel, chrome plating, nickel-plated carbon steel, ceramic

LineLazer V 200DC HP Auto Series (Models 17Y232, 17Y269)		
	U.S.	**Metric**
Dimensions		
Height (with handle bar down)	Unpackaged - 44.5 in. Packaged - 52.5 in.	Unpackaged - 113.03 cm Packaged - 133.35 cm
Width	Unpackaged - 34.25 in. Packaged - 37.0 in.	Unpackaged - 87.0 cm Packaged - 93.98 cm
Length (with platform down)	Unpackaged - 68.75 in. Packaged - 73.5 in.	Unpackaged - 174.63 cm Packaged - 186.69 cm
Weight (dry - no paint)	Unpackaged - 427 lbs Packaged - 494 lbs	Unpackaged - 194 kg Packaged - 224 kg
Noise (dBa)		
Sound Power per ISO 3744:	103.1	
Sound Pressure measured at 3.3 feet (1m):	86.5	
Vibration (m/s^2) (8 hours daily exposure)		
Hand Arm (per ISO 5349)	1.6	
Whole Body (per ISO 2631)	0.4	
Power Rating (Horse Power)		
Power Rating (Horse Power) per SAE J1349	6.5 HP @ 3600 rpm	4.84 kW @ 3600 rpm
Maximum Delivery	2.15 gpm	8.14 lpm
Maximum Tip Size 1 gun 2 gun	 .047 .034	
Inlet paint strainer	16 mesh	1190 micron
Outlet paint strainer	50 mesh	297 micron
Pump inlet size	1 in. NSPM (m)	
Pump outlet size	3/8 NPT (f)	
Maximum working pressure	3300 psi	228 bar, 22.8 MPa
Maximum fluid working pressure	3300 psi	228 bar, 22.8 MPa
Maximum free-flow delivery	2.15 gpm	8.14 lpm
Cycles per gallon/liter	62 cpg	16.4 cpl
Hydraulic reservoir capacity	1.25 gallons	4.73 liters
Hydraulic pressure	1825 psi	124 bar
Electrical Capacity	84 W@ 3600 rpm	
Battery	12V, 22Ah, Sealed lead acid, Deep cycle	

Wetted Parts: PTFE, Nylon, polyurethane, V-Max, UHMWPE, fluoroelastomer, acetal, leather, tungsten carbide, stainless steel, chrome plating, nickel-plated carbon steel, ceramic

LineLazer V 200HS HP Reflective Series (Models 17H460, 17J964, 17K585, 17H465)		
	U.S.	**Metric**
Dimensions		
Height (with handle bar down)	Unpackaged - 44.5 in. Packaged - 52.5 in.	Unpackaged - 113.03 cm Packaged - 133.35 cm
Width	Unpackaged - 34.25 in. Packaged - 37.0 in.	Unpackaged - 87.0 cm Packaged - 93.98 cm
Length (with platform down)	Unpackaged - 68.75 in. Packaged - 73.5 in.	Unpackaged - 174.63 cm Packaged - 186.69 cm
Weight (dry - no paint)	Unpackaged - 417 lbs Packaged - 484 lbs	Unpackaged - 189 kg Packaged - 219kg
Noise (dBa)		
Sound Power per ISO 3744:	103.1	
Sound Pressure measured at 3.3 feet (1m):	86.5	
Vibration (m/s^2) (8 hours daily exposure)		
Hand Arm (per ISO 5349)	1.6	
Whole Body (per ISO 2631)	0.4	
Power Rating (Horse Power)		
Power Rating (Horse Power) per SAE J1349	6.5 HP @ 3600 rpm	4.84 kW @ 3600 rpm
Maximum Delivery	2.15 gpm	8.14 lpm
Maximum Tip Size 1 gun 2 gun	 .047 .034	
Inlet paint strainer	16 mesh	1190 micron
Outlet paint strainer	50 mesh	297 micron
Pump inlet size	1 in. NSPM (m)	
Pump outlet size	3/8 NPT (f)	
Maximum working pressure	3300 psi	228 bar, 22.8 MPa
Maximum fluid working pressure	3300 psi	228 bar, 22.8 MPa
Maximum free-flow delivery	2.15 gpm	8.14 lpm
Cycles per gallon/liter	62 cpg	16.4 cpl
Hydraulic reservoir capacity	1.25 gallons	4.73 liters
Hydraulic pressure	1825 psi	124 bar
Electrical Capacity	84 W@ 3600 rpm	
Battery	12V, 22Ah, Sealed lead acid, Deep cycle	

Wetted Parts: PTFE, Nylon, polyurethane, V-Max, UHMWPE, fluoroelastomer, acetal, leather, tungsten carbide, stainless steel, chrome plating, nickel-plated carbon steel, ceramic

LineLazer V 200DC HP Reflective Series (Models 17Y233, 17Y270, 17Y648)		
	U.S.	**Metric**
Dimensions		
Height (with handle bar down)	Unpackaged - 44.5 in. Packaged - 52.5 in.	Unpackaged - 113.03 cm Packaged - 133.35 cm
Width	Unpackaged - 34.25 in. Packaged - 37.0 in.	Unpackaged - 87.0 cm Packaged - 93.98 cm
Length (with platform down)	Unpackaged - 68.75 in. Packaged - 73.5 in.	Unpackaged - 174.63 cm Packaged - 186.69 cm
Weight (dry - no paint)	Unpackaged - 522 lbs Packaged - 589 lbs	Unpackaged - 237 kg Packaged - 267 kg
Noise (dBa)		
Sound Power per ISO 3744:	103.1	
Sound Pressure measured at 3.3 feet (1m):	86.5	
Vibration (m/s^2) (8 hours daily exposure)		
Hand Arm (per ISO 5349)	1.6	
Whole Body (per ISO 2631)	0.4	
Power Rating (Horse Power)		
Power Rating (Horse Power) per SAE J1349	6.5 HP @ 3600 rpm	4.84 kW @ 3600 rpm
Maximum Delivery	2.15 gpm	8.14 lpm
Maximum Tip Size 1 gun 2 gun	 .047 .034	
Inlet paint strainer	16 mesh	1190 micron
Outlet paint strainer	50 mesh	297 micron
Pump inlet size	1 in. NSPM (m)	
Pump outlet size	3/8 NPT (f)	
Maximum working pressure	3300 psi	228 bar, 22.8 MPa
Maximum fluid working pressure	3300 psi	228 bar, 22.8 MPa
Maximum free-flow delivery	2.15 gpm	8.14 lpm
Cycles per gallon/liter	62 cpg	16.4 cpl
Hydraulic reservoir capacity	1.25 gallons	4.73 liters
Hydraulic pressure	1825 psi	124 bar
Electrical Capacity	84 W@ 3600 rpm	
Battery	12V, 22Ah, Sealed lead acid, Deep cycle	

Wetted Parts: PTFE, Nylon, polyurethane, V-Max, UHMWPE, fluoroelastomer, acetal, leather, tungsten carbide, stainless steel, chrome plating, nickel-plated carbon steel, ceramic

Graco Standard Warranty

Graco warrants all equipment referenced in this document which is manufactured by Graco and bearing its name to be free from defects in material and workmanship on the date of sale to the original purchaser for use. With the exception of any special, extended, or limited warranty published by Graco, Graco will, for a period of twelve months from the date of sale, repair or replace any part of the equipment determined by Graco to be defective. This warranty applies only when the equipment is installed, operated and maintained in accordance with Graco's written recommendations.

This warranty does not cover, and Graco shall not be liable for general wear and tear, or any malfunction, damage or wear caused by faulty installation, misapplication, abrasion, corrosion, inadequate or improper maintenance, negligence, accident, tampering, or substitution of non-Graco component parts. Nor shall Graco be liable for malfunction, damage or wear caused by the incompatibility of Graco equipment with structures, accessories, equipment or materials not supplied by Graco, or the improper design, manufacture, installation, operation or maintenance of structures, accessories, equipment or materials not supplied by Graco.

This warranty is conditioned upon the prepaid return of the equipment claimed to be defective to an authorized Graco distributor for verification of the claimed defect. If the claimed defect is verified, Graco will repair or replace free of charge any defective parts. The equipment will be returned to the original purchaser transportation prepaid. If inspection of the equipment does not disclose any defect in material or workmanship, repairs will be made at a reasonable charge, which charges may include the costs of parts, labor, and transportation.

THIS WARRANTY IS EXCLUSIVE, AND IS IN LIEU OF ANY OTHER WARRANTIES, EXPRESS OR IMPLIED, INCLUDING BUT NOT LIMITED TO WARRANTY OF MERCHANTABILITY OR WARRANTY OF FITNESS FOR A PARTICULAR PURPOSE.

Graco's sole obligation and buyer's sole remedy for any breach of warranty shall be as set forth above. The buyer agrees that no other remedy (including, but not limited to, incidental or consequential damages for lost profits, lost sales, injury to person or property, or any other incidental or consequential loss) shall be available. Any action for breach of warranty must be brought within two (2) years of the date of sale.

GRACO MAKES NO WARRANTY, AND DISCLAIMS ALL IMPLIED WARRANTIES OF MERCHANTABILITY AND FITNESS FOR A PARTICULAR PURPOSE, IN CONNECTION WITH ACCESSORIES, EQUIPMENT, MATERIALS OR COMPONENTS SOLD BUT NOT MANUFACTURED BY GRACO. These items sold, but not manufactured by Graco (such as electric motors, switches, hose, etc.), are subject to the warranty, if any, of their manufacturer. Graco will provide purchaser with reasonable assistance in making any claim for breach of these warranties.

In no event will Graco be liable for indirect, incidental, special or consequential damages resulting from Graco supplying equipment hereunder, or the furnishing, performance, or use of any products or other goods sold hereto, whether due to a breach of contract, breach of warranty, the negligence of Graco, or otherwise.

FOR GRACO CANADA CUSTOMERS
The Parties acknowledge that they have required that the present document, as well as all documents, notices and legal proceedings entered into, given or instituted pursuant hereto or relating directly or indirectly hereto, be drawn up in English. Les parties reconnaissent avoir convenu que la rédaction du présente document sera en Anglais, ainsi que tous documents, avis et procédures judiciaires exécutés, donnés ou intentés, à la suite de ou en rapport, directement ou indirectement, avec les procédures concernées.

POUR LES CLIENTS DE GRACO PARLANT FRANCAIS
Les parties reconnaissent avoir convenu que la rédaction du présent document ainsi que de tous les documents, avis et procédures judiciaires exécutés, donnés ou intentés à la suite de ou en rapport, directement ou indirectement, avec les procédures concernées, sera en anglais.

ADDITIONAL WARRANTY COVERAGE
Graco does provide extended warranty and wear warranty for products described in the "Graco Contractor Equipment Warranty Program".

Graco Information

For the latest information about Graco products, visit www.graco.com.

For patent information, see www.graco.com/patents.

TO PLACE AN ORDER, contact your Graco distributor or call 1-800-690-2894 to identify the nearest distributor.

All written and visual data contained in this document reflects the latest product information available at the time of publication. Graco reserves the right to make changes at any time without notice.

Original instructions. This manual contains English. MM 3A3390
Graco Headquarters: Minneapolis
International Offices: Belgium, China, Japan, Korea

GRACO INC. AND SUBSIDIARIES • P.O. BOX 1441 • MINNEAPOLIS MN 55440-1441 • USA
Copyright 2016, Graco Inc. All Graco manufacturing locations are registered to ISO 9001.
www.graco.com
Revision E, June 2019